COUNTY OF MENDOCINO
DEPARTMENT OF PLANNING AND BUILDING SERVICES
860 NORTH BUSH STREET · UKIAH · CALIFORNIA · 95482
120 WEST FIR STREET · FT. BRAGG · CALIFORNIA · 95437

BRENT SCHULTZ, DIRECTOR
TELEPHONE: 707-234-6650
FAX: 707-463-5709
FB PHONE: 707-964-5379
FB FAX: 707-961-2427
pbs@mendocinocounty.org
www.mendocinocounty.org/pbs

September 18, 2019

Planning – Fort Bragg
Department of Transportation
Environmental Health - Fort Bragg
Building Inspection - Fort Bragg
County Addresser
Assessor
Forestry Advisor
Air Quality Management
Sonoma State University
Native Plant Society
Airport Land Use Commission
CalFire – Prevention
CalFire – Resource Management
Department of Fish and Wildlife
Coastal Commission
Gualala Municipal Advisory Council
South Coast Fire District
Cloverdale Rancheria
Manchester-Point Arena Band of Pomo Indians
Redwood Valley Rancheria
Sherwood Valley Band of Pomo Indians

CASE#: U_2019-0017
DATE FILED: 7/17/2019
OWNER: CRAIG & KATHLEEN BRYSON
APPLICANT: TELESPAN COMMUNICATIONS LLC
AGENT: TELESPAN COMMUNICATIONS LLC, TIM COTTER
REQUEST: Coastal Development Use Permit to authorize construction and operation of a wireless communication facility consisting of a 199 ft. tall monopine with various appurtenant equipment and ground equipment including a generator and equipment cabinet. Associated improvements include a 20 ft. wide easement for access and utilities to the site location. The proposed monopine will be located within a 4,500 sq. ft. fenced compound.
LOCATION: 0.8± miles northwest of Gualala town center, on the north side of Big Gulch Road (CR 543), 0.4± miles east of its intersection with State Route 1 (SR 1), no address assigned, Gualala (APN: 145-070-01).
ENVIRONMENTAL DETERMINATION: Mitigated Negative Declaration
SUPERVISORIAL DISTRICT: 5
STAFF PLANNER: MARK CLISER
RESPONSE DUE DATE: October 2, 2019

PROJECT INFORMATION CAN BE FOUND AT:
https://www.mendocinocounty.org/government/planning-building-services/public-agency-referrals

Mendocino County Planning & Building Services is soliciting your input, which will be used in staff analysis and forwarded to the appropriate public hearing. You are invited to comment on any aspect of the proposed project(s). Please convey any requirements or conditions your agency requires for project compliance to the project coordinator at the above address, or submit your comments by email to pbs@mendocinocounty.org. Please note the case number and name of the project coordinator with all correspondence to this department.

We have reviewed the above application and recommend the following (please check one):

☐ No comment at this time.

☐ Recommend conditional approval (attached).

☐ Applicant to submit additional information (attach items needed, or contact the applicant directly, copying Planning and Building Services in any correspondence you may have with the applicant)

☐ Recommend denial (Attach reasons for recommending denial).

☐ Recommend preparation of an Environmental Impact Report (attach reasons why an EIR should be required).

☐ Other comments (attach as necessary).

REVIEWED BY:

Signature _____ Department _____ Date _____

REPORT FOR: COASTAL DEVELOPMENT USE PERMIT **CASE:** U_2019-0017

OWNER: CRAIG & KATHLEEN BRYSON

APPLICANT: TELESPAN COMMUNICATIONS LLC

AGENT: TELESPAN COMMUNICATIONS LLC, TIM COTTER

REQUEST: Coastal Development Use Permit to authorize construction and operation of a wireless communication facility consisting of a 199 ft. tall monopine with various appurtenant equipment and ground equipment including a generator and equipment cabinet. Associated improvements include a 20 ft. wide easement for access and utilities to the site location. The proposed monopine will be located within a 4,500 sq. ft. fenced compound.

LOCATION: 0.8± miles northwest of Gualala town center, on the north side of Big Gulch Road (CR 543), 0.4± miles east of its intersection with State Route 1 (SR 1), no address assigned, Gualala (APN: 145-070-01).

APN/S: 145-070-01-00

PARCEL SIZE: 65.44± acres

GENERAL PLAN: FL160:R

ZONING: TP:160

EXISTING USES: NA

DISTRICT: Supervisorial District 5 (Williams)

RELATED CASES: NA

	ADJACENT GENERAL PLAN	ADJACENT ZONING	ADJACENT LOT SIZES	ADJACENT USES
NORTH:	RR5	RR:5	10±; 5± acres	Residential
EAST:	RMR40	RMR:40	78.76± acres	Residential
SOUTH:	RR5(1)	RR:5	4.4±; 0.7±; 0.5±; 0.8±; 0.5±;	Residential
WEST:	RL160	RL:160	124.82± acres	Agricultural

REFERRAL AGENCIES

LOCAL
- ☒ Air Quality Management District
- ☒ Airport Land Use Commission
- ☒ Assessor's Office
- ☒ Building Division Fort Bragg
- ☒ County Addresser
- ☒ Department of Transportation (DOT)
- ☒ Environmental Health (EH)
- ☒ Forestry Advisor
- ☒ South Coast Fire District
- ☒ Gualala MAC
- ☒ Planning Division Fort Bragg
- ☒ Sonoma State University

STATE
- ☒ CALFIRE (Land Use)
- ☒ CALFIRE (Resource Management)
- ☒ California Coastal Commission
- ☒ California Dept. of Fish & Wildlife
- ☒ California Native Plant Society

TRIBAL
- ☒ Cloverdale Rancheria
- ☒ Manchester Rancheria
- ☒ Redwood Valley Rancheria
- ☒ Sherwood Valley Band of Pomo Indians

ADDITIONAL INFORMATION:

STAFF PLANNER: MARK CLISER **DATE:** 9/11/19

ENVIRONMENTAL DATA

1. MAC:
GIS
Gualala

2. FIRE HAZARD SEVERITY ZONE:
CALFIRE FRAP maps/GIS
Very High

3. FIRE RESPONSIBILITY AREA:
CALFIRE FRAP maps/GIS
Calfire / South Coast Fire Protection District

4. FARMLAND CLASSIFICATION:
GIS
Grazing Land (G)

5. FLOOD ZONE CLASSIFICATION:
FEMA Flood Insurance Rate Maps (FIRM)
NO

6. COASTAL GROUNDWATER RESOURCE AREA:
Coastal Groundwater Study/GIS
Critical Water Areas

7. SOIL CLASSIFICATION:
Mendocino County Soils Study Eastern/Western Part
Western

8. PYGMY VEGETATION OR PYGMY CAPABLE SOIL:
LCP maps, Pygmy Soils Maps; GIS
NA

9. WILLIAMSON ACT CONTRACT:
GIS/Mendocino County Assessor's Office
NO

10. TIMBER PRODUCTION ZONE:
GIS
YES

11. WETLANDS CLASSIFICATION:
GIS
Freshwater Emergent Wetland

12. EARTHQUAKE FAULT ZONE:
Earthquake Fault Zone Maps; GIS
NO

13. AIRPORT LAND USE PLANNING AREA:
Airport Land Use Plan; GIS
NO

14. SUPERFUND/BROWNFIELD/HAZMAT SITE:
GIS; General Plan 3-11
NO

15. NATURAL DIVERSITY DATABASE:
CA Dept. of Fish & Wildlife Rarefind Database/GIS
YES

16. STATE FOREST/PARK/RECREATION AREA ADJACENT:
GIS; General Plan 3-10
NA

17. LANDSLIDE HAZARD:
Hazards and Landslides Map; GIS; Policy RM-61; General Plan 4-44
NA

18. WATER EFFICIENT LANDSCAPE REQUIRED:
Policy RM-7; General Plan 4-34
NA

19. WILD AND SCENIC RIVER:
www.rivers.gov (Eel Only); GIS
NA

20. SPECIFIC PLAN/SPECIAL PLAN AREA:
Various Adopted Specific Plan Areas; GIS
NA

21. STATE CLEARINGHOUSE REQUIRED:
Policy
NA

22. OAK WOODLAND AREA:
USDA
NA

23. HARBOR DISTRICT:
Sec. 20.512
NA

FOR PROJECTS WITHIN THE COASTAL ZONE ONLY

24. LCP LAND USE CLASSIFICATION:
LCP Land Use maps/GIS
See Attached LCP Land Use Classification Map

25. LCP LAND CAPABILITIES & NATURAL HAZARDS:
LCP Land Capabilities maps/GIS; 20.500
See Attached….

26. LCP HABITATS & RESOURCES:
LCP Habitat maps/GIS; 20.496
See Attached…

27. COASTAL COMMISSION APPEALABLE AREA:
Post LCP Certification Permit and Appeal Jurisdiction maps/GIS; 20.544
NA

28. CDP EXCLUSION ZONE:
CDP Exclusion Zone maps/GIS
NA

29. HIGHLY SCENIC AREA:
Highly Scenic & Tree Removal Area Maps/GIS; Secs. 20.504.015, 20.504.020
NO

30. BIOLOGICAL RESOURCES & NATURAL AREAS:
Biological Resources & Natural Area Map; GIS; General Plan 4-9
Yes

31. BLUFFTOP GEOLOGY:
GIS; 20.500.020
NA

TeleSpan COMMUNICATIONS

GUALALA WIRELESS COLLOCATION

HIGHWAY 1
GUALALA, CA 95445

PROJECT DESCRIPTION

A (P) UNMANNED TELECOMMUNICATION FACILITY CONSISTING OF INSTALLING:

- A (P) TELESPAN MULTI–CARRIER COMPOUND
- A (P) 199'–0" TALL MONOPINE
- A (P) 25'X15' VERIZON WIRELESS EQUIPMENT LEASE AREA WITHIN (P) COMPOUND
- A (P) 25'X15' AT&T WIRELESS EQUIPMENT LEASE AREA WITHIN (P) COMPOUND
- (12) (P) VERIZON WIRELESS ANTENNAS, (24) (P) RRU UNITS & (6) (P) SURGE SUPPRESSORS ON (P) MONOPINE
- (12) (P) AT&T ANTENNAS, (24) (P) RRU UNITS & (4) (P) SURGE SUPPRESSORS ON (P) MONOPINE

PROJECT INFORMATION

SITE NAME:	GUALALA WIRELESS COLLOCATION	SITE #:	–
COUNTY:	MENDOCINO	JURISDICTION:	COUNTY OF MENDOCINO
APN:	145–070–01	POWER:	PG&E
SITE ADDRESS:	HIGHWAY 1 GUALALA, CA 95445	TELEPHONE:	AT&T
CURRENT ZONING:	TIMBER PRESERVE (TP)		
CONSTRUCTION TYPE:	I–B		
OCCUPANCY TYPE:	U, (UNMANNED COMMUNICATIONS FACILITY)		
PROPERTY OWNER:	R. CRAIG BRYSON & KATHLEEN D. BRYSON, TRUSTEES OF THE R. CRAIG BRYSON TRUST DATED THE 26TH OF MAY 2005 & KATHLEEN D. BRYSON & R. CRAIG BRYSON, TRUSTEES OF THE KATHLEEN D. BRYSON TRUST DATED THE 26TH DAY OF MAY 2005		
APPLICANT:	TELESPAN COMMUNICATIONS LLC 3888 STATE ST, STE# 204 SANTA BARBARA, CA 93105		
LEASING CONTACT:	ATTN: TIM COTTER (805) 451–6283 TCOTTER@TSPAN.NET		
ZONING CONTACT:	ATTN: TIM COTTER (805) 451–6283 TCOTTER@TSPAN.NET		
CONSTRUCTION CONTACT:	ATTN: TIM COTTER (805) 451–6283 TCOTTER@TSPAN.NET		
LATITUDE:	N 38° 47' 04.95" NAD 83		
LONGITUDE:	W –123° 32' 31.76" NAD 83		
AMSL:	±397.2'		

VICINITY MAP

DRIVING DIRECTIONS

FROM: 3888 STATE ST, SANTA BARBARA, CA 93105
TO: HIGHWAY 1, GUALALA, CA 95445

1.	START OUT GOING WEST ON STATE ST TOWARD N LA CUMBRE RD.	0.56 MILES
2.	TURN RIGHT ONTO SAN MARCOS PASS RD/CA–154. CONTINUE TO FOLLOW CA–154.	23.97 MILES
3.	ENTER NEXT ROUNDABOUT AND TAKE THE 2ND EXIT ONTO CHUMASH HWY/SAN MARCOS PASS ROAD/CA–154.	8.56 MILES
4.	MERGE ONTO US–101 N TOWARD SANTA MARIA.	241.96 MILES
5.	MERGE ONTO I–880 N VIA EXIT 388B TOWARD OAKLAND.	40.31 MILES
6.	MERGE ONTO I–580 W VIA EXIT 46B TOWARD SAN RAFAEL/SACRAMENTO (PORTIONS TOLL).	18.72 MILES
7.	STAY STRAIGHT TO GO ONTO US–101 N.	20.91 MILES
8.	TAKE THE CA–116 E EXIT, EXIT 472B, TOWARD SONOMA/NAPA.	0.31 MILES
9.	TURN RIGHT ONTO LAKEVILLE ST.	1.13 MILES
10.	TURN LEFT ONTO E WASHINGTON ST.	0.61 MILES
11.	E WASHINGTON ST BECOMES BODEGA AVE.	8.03 MILES
12.	BODEGA AVE BECOMES VALLEY FORD RD.	10.67 MILES
13.	VALLEY FORD RD BECOMES S HIGHWAY 1/PACIFIC COAST HIGHWAY/CA–1.	57.11 MILES
14.	TURN RIGHT ONTO BIG GULCH RD.	0.58 MILES
15.	TAKE THE 1ST LEFT ONTO OSPRY RD (PORTIONS UNPAVED).	0.14 MILES
16.	DESTINATION IS ON THE LEFT.	

END AT: HIGHWAY 1, GUALALA, CA 95445

ESTIMATED TIME: 7 HOURS 40 MINUTES ESTIMATED DISTANCE: 434 MILES

CODE COMPLIANCE

ALL WORK & MATERIALS SHALL BE PERFORMED & INSTALLED IN ACCORDANCE WITH THE CURRENT EDITIONS OF THE FOLLOWING CODES AS ADOPTED BY THE LOCAL GOVERNING AUTHORITIES. NOTHING IN THESE PLANS IS TO BE CONSTRUED TO PERMIT WORK NOT CONFORMING TO THESE CODES:

2016 CALIFORNIA ADMINISTRATIVE CODE, PART 1, TITLE 24 C.C.R.
2016 CALIFORNIA BUILDING CODE (CBC), PART 2, VOLUME 1&2, TITLE 24 C.C.R.
(2015 INTERNATIONAL BUILDING CODE AND 2016 CALIFORNIA AMENDMENTS)
2016 CALIFORNIA ELECTRICAL CODE (CEC), PART 3, TITLE 24 C.C.R.
(2014 NATIONAL ELECTRICAL CODE AND 2016 CALIFORNIA AMENDMENTS)
2016 CALIFORNIA MECHANICAL CODE (CMC) PART 4, TITLE 24 C.C.R.
(2015 UNIFORM MECHANICAL CODE AND 2016 CALIFORNIA AMENDMENTS)
2016 CALIFORNIA PLUMBING CODE (CPC), PART 5, TITLE 24 C.C.R.
(2015 UNIFORM PLUMBING CODE AND 2016 CALIFORNIA AMENDMENTS)
2016 CALIFORNIA ENERGY CODE (CEC), PART 6, TITLE 24 C.C.R.
2016 CALIFORNIA FIRE CODE, PART 9, TITLE 24 C.C.R.
(2015 INTERNATIONAL FIRE CODE AND 2016 CALIFORNIA AMENDMENTS)
2016 CALIFORNIA GREEN BUILDING STANDARDS CODE, PART 11, TITLE 24 C.C.R.
2016 CALIFORNIA REFERENCED STANDARDS, PART 12, TITLE 24 C.C.R.
ANSI/EIA–TIA–222–G

ALONG WITH ANY OTHER APPLICABLE LOCAL & STATE LAWS AND REGULATIONS

DISABLED ACCESS REQUIREMENTS

THIS FACILITY IS UNMANNED & NOT FOR HUMAN HABITATION. DISABLED ACCESS & REQUIREMENTS ARE NOT REQUIRED IN ACCORDANCE WITH CALIFORNIA STATE BUILDING CODE, TITLE 24 PART 2, SECTION 11B–203.5

SHEET INDEX

APPROVAL

RF

LEASING

ZONING

CONSTRUCTION

TELESPAN

GUALALA WIRELESS COLLOCATION

HIGHWAY 1
GUALALA, CA 95445

ISSUE STATUS

△	DATE	DESCRIPTION	BY
	06/12/19	ZD 100%	–
	08/01/19	CLIENT REV	–
	08/05/19	CLIENT REV	–
	–	–	–
	–	–	–
	–	–	–

DRAWN BY: J. SMITH
CHECKED BY: K. SORENSEN
APPROVED BY: –
DATE: 08/05/19

Streamline Engineering and Design, Inc.
8445 Sierra College Blvd, Suite E Granite Bay, CA 95746
Contact: Larry Houghtby Phone: 916-275-4180
E-Mail: larry@streamlineeng.com Fax: 916-660-1941

PRELIMINARY: NOT FOR CONSTRUCTION

KEVIN R. SORENSEN
S4469

TeleSpan COMMUNICATIONS
3888 STATE ST, STE# 204
SANTA BARBARA, CA 93105

SHEET TITLE:
TITLE

SHEET NUMBER:
T-1

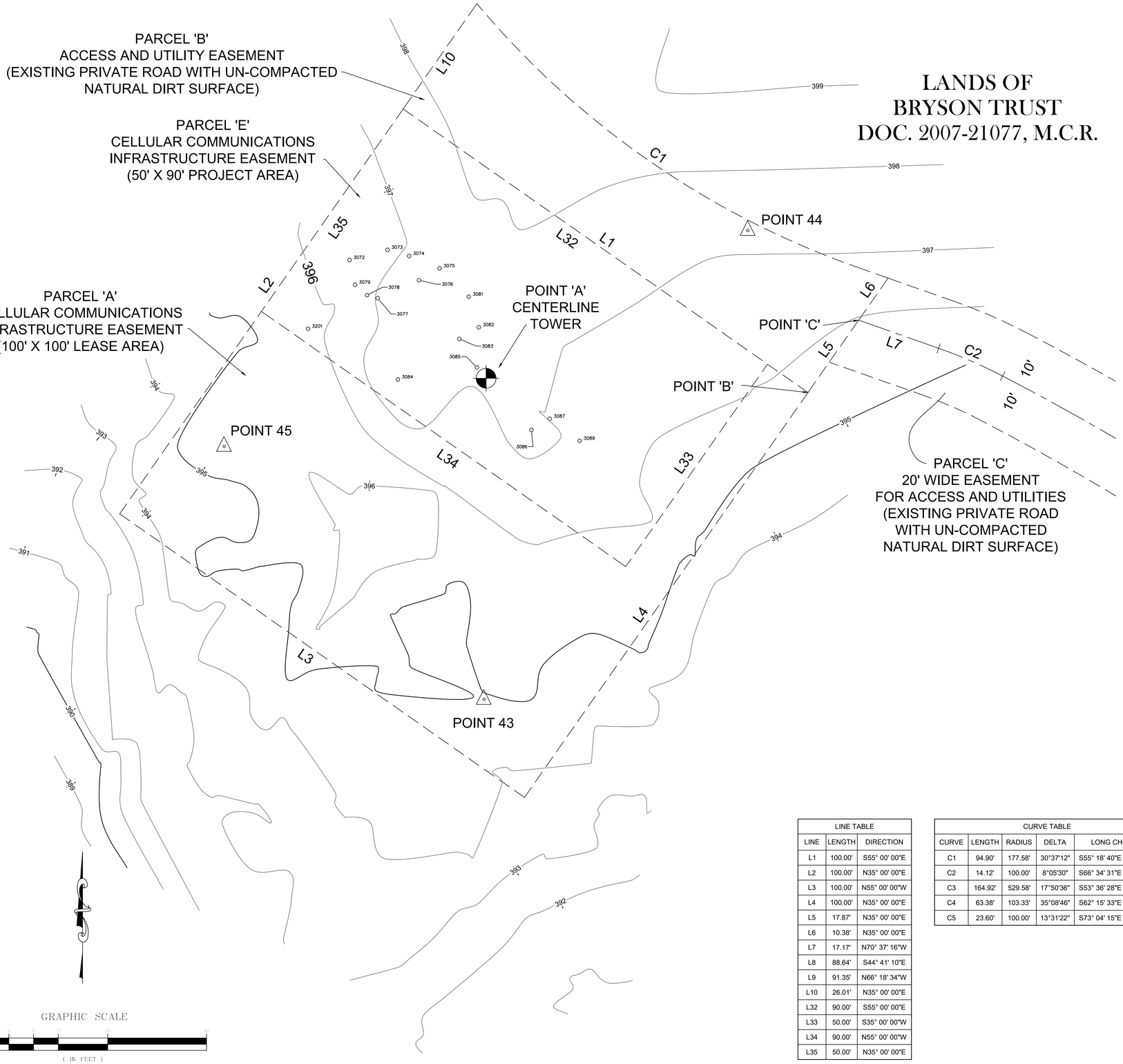

GRAPHIC SCALE

(IN FEET)
1 inch = 10 ft.

SURVEYOR'S STATEMENT

THIS SURVEY HAS BEEN PREPARED BY ME OR UNDER MY DIRECTION AT THE REQUEST OF TELESPAN COMMUNICATIONS, L.L.C., IN APRIL 2019.

DATE : _____

L.S. NO. 5927
LIC. EXP. 12/31/20

_____
MARK E. KILLOPS

LICENSED LAND SURVEYOR MARK E. KILLOPS L.S. 5927 EXP. 12-31-18 STATE OF CALIFORNIA

LEGEND AND ABBREVIATIONS

- △ SURVEY CONTROL POINT AS NOTED
- ◆ CENTER OF PROPOSED TOWER
- ○ TREE NUMBERED AS NOTED

BK.	BOOK	N.	NORTH
PG.	PAGE	E.	EAST
T.	TOWNSHIP	P.M.	PARCEL MAP
R.	RANGE	M.D.B.&M.	MOUNT DIABLO BASE & MERIDIAN
M.C.R.	MENDOCINO COUNTY RECORDS	P.O.B.	POINT OF BEGINNING

GENERAL NOTES

1. ALL DISTANCES AND DIMENSIONS AR SHOWN IN FEET AND DECIMALS THEREOF.
2. BASIS OF BEARINGS: THE BEARING BETWEEN FOUND CALTRANS SURVEY CONTROL MONUMENTS DESIGNATED AS "MEN 1-2.39" AND "MEN 1-2.50" (BOTH FOUND 5/8" REBARS AND ALUMINUM CAPS) IS TAKEN AS NORTH 55°37'15" WEST 568.63' (RECORD AND MEASURED).
3. HORIZONTAL DATUM: N 2050738.697 AND E 6119700.62 (SPC ZONE 0402, NAD83 (1998), EPOCH 2004.69) AT FOUND CALTRANS SURVEY CONTROL MONUMENT DESIGNATED "MEN 1-2.39". CONVERGENCE ANGLE: -00°58'39" COMBINED FACTOR: 0.99993.
4. VERTICAL DATUM: ELEVATION 80.61' (NAVD88) ON CALTRANS CONTROL MONUMENT DESIGNATED "MEN 1-2.39".
5. THE BOUNDARY SHOWN HEREON IS PREDICATED ON RECORD DATA SHOWN ON THE RECORD OF SURVEY FILED IN MAP CASE 2, DRAWER 29, PAGE 45, MENDOCINO COUNTY RECORDS, AND RECORD OF SURVEY FILED IN MAP CASE 2, DRAWER 1, PAGE 82, MENDOCINO COUNTY RECORDS. ALL MEASUREMENTS AND DIMENSIONS ARE IN SUBSTANTIAL AGREEMENT WITH THE PUBLIC RECORD UNLESS OTHERWISE NOTED.
6. TITLE TO THE SUBJECT PROPERTY IS VESTED IN THE R. CRAIG BRYSON AND KATHLEEN D. BRYSON, TRUSTEES OF THE R. CRAIG BRYSON TRUST, DATED MAY 26, 2005, AND THE KATHLEEN D. BRYSON TRUST, DATED MAY 26, 2005, BY DEED RECORDED NOVEMBER 20, 2007, IN OFFICIAL RECORDS OF MENDOCINO COUNTY UNDER DOCUMENT NO. 2007-21077.
7. NORTH LATITUDE 38°47'04.95" AND WEST LONGITUDE -123°32'31.76" WITH ELEVATION 397.2' AT CENTER BASE OF PROPOSED TOWER.
8. TREES SHOWN ARE NOT INCLUSIVE OF ALL TREES IN THE PROPOSED LEASE AREA. DIAMETER IS TAKEN AT BREAST HEIGHT AND SHOWN IN INCHES. HEIGHTS SHOWN ARE VISUAL ESTIMATES AND ARE APPROXIMATE. WITH THE EXCEPTION OF REDWOODS, TREES HAVING A DIAMETER LESS THAN 6" HAVE NOT BEEN MAPPED. SEE SHEET 2 FOR ADDITIONAL TREES SHOWN WITHIN THE 100' X 100' LEASE AREA (PARCEL 'A').
9. FROM THE CENTER BASE OF THE PROPOSED TOWER (POINT 'A') THE SOUTH QUARTER CORNER OF SECTION 21, TOWNSHIP 11 NORTH, RANGE 15 WEST, MOUNT DIABLO BASELINE AND MERIDIAN, BEARS SOUTH 18°26'32" WEST 1749.86' DISTANT.
10. THERE ARE NO EXISTING STRUCTURES OR IMPROVEMENTS LOCATED WITHIN 300' OF THE PROJECT LOCATION. TREE HEIGHTS WITHIN THAT RADIUS GENERALLY RANGE FROM 135' TO 155'.

LINE TABLE

LINE	LENGTH	DIRECTION
L1	100.00'	S55° 00' 00"E
L2	100.00'	N35° 00' 00"E
L3	100.00'	N55° 00' 00"W
L4	100.00'	N35° 00' 00"E
L5	17.87'	N35° 00' 00"E
L6	10.38'	N35° 00' 00"E
L7	17.17'	N70° 37' 16"W
L8	88.64'	S44° 41' 10"E
L9	91.35'	N66° 18' 34"W
L10	26.01'	N35° 00' 00"E
L32	90.00'	S55° 00' 00"E
L33	50.00'	S35° 00' 00"W
L34	90.00'	N55° 00' 00"W
L35	50.00'	N35° 00' 00"E

CURVE TABLE

CURVE	LENGTH	RADIUS	DELTA	LONG CHORD	
C1	94.90'	177.58'	30°37'12"	S55° 18' 40"E	93.78'
C2	14.12'	100.00'	8°05'30"	S66° 34' 31"E	14.11'
C3	164.92'	529.58'	17°50'36"	S53° 36' 28"E	164.26'
C4	63.38'	103.33'	35°08'46"	S62° 15' 33"E	62.39'
C5	23.60'	100.00'	13°31'22"	S73° 04' 15"E	23.55'

TREES WITHIN PROJECT AREA
(TO BE REMOVED)

NUMBER	SPECIES	DIAMETER
3072	FIR	6"
3073	FIR	8"
3074	FIR	10"
3075	REDWOOD	6" & 12"
3076	FIR	8"
3077	FIR	9"
3078	FIR	10"
3079	FIR	6"
3081	FIR	12"
3082	FIR	9"
3083	REDWOOD	6"
3084	FIR	9"
3085	FIR	8"
3086	REDWOOD	12"
3087	FIR	12"
3089	FIR	9"
3201	FIR	10"

POINT TABLE

POINT	NORTH	EAST	ELEVATION	DESCRIPTION
39	2,051,111.18	6,122,551.05	384.39	60D SPIKE
41	2,051,144.85	6,122,436.34	387.20	60D SPIKE
42	2,051,282.14	6,122,288.21	388.18	60D SPIKE
43	2,051,261.35	6,122,102.44	394.98	60D SPIKE
44	2,051,356.20	6,122,155.82	397.27	60D SPIKE
45	2,051,312.52	6,122,049.86	395.47	60D SPIKE
'A'	2,051,326.30	6,122,102.83	397.2	CENTER TOWER
'B'	2,051,323.42	6,122,086.56	NONE	P.O.B.
'C'	2,051,332.37	6,122,194.41	NONE	P.O.B.
'D'	2,051,093.68	6,122,563.32	NONE	P.O.B.

KILLOPS LAND SURVEYING
SMITH RIVER CALIFORNIA
"Know Your Boundaries"

REVISIONS
ISSUE: 04/23/19
REV: 04/24/19
REV: 05/12/19
REV: 06/17/19

TOPOGRAPHIC SURVEY

TELESPAN COMMUNICATIONS, L.L.C.
LANDS OF R. CRAIG BRYSON & KATHLEEN D. BRYSON, TRUSTEES OF THE R. CRAIG BRYSON TRUST, DATED MAY 26, 2005, AND THE KATHLEEN D. BRYSON TRUST, DATED MAY 26, 2005
MENDOCINO COUNTY APN 145-070-01, GUALALA, CALIFORNIA

DATE
APRIL 2019

DRAWN BY	CHECKED
MEK	GAK

PROJECT NO.
16-297-05

SHEET 1 OF 3 SHEETS

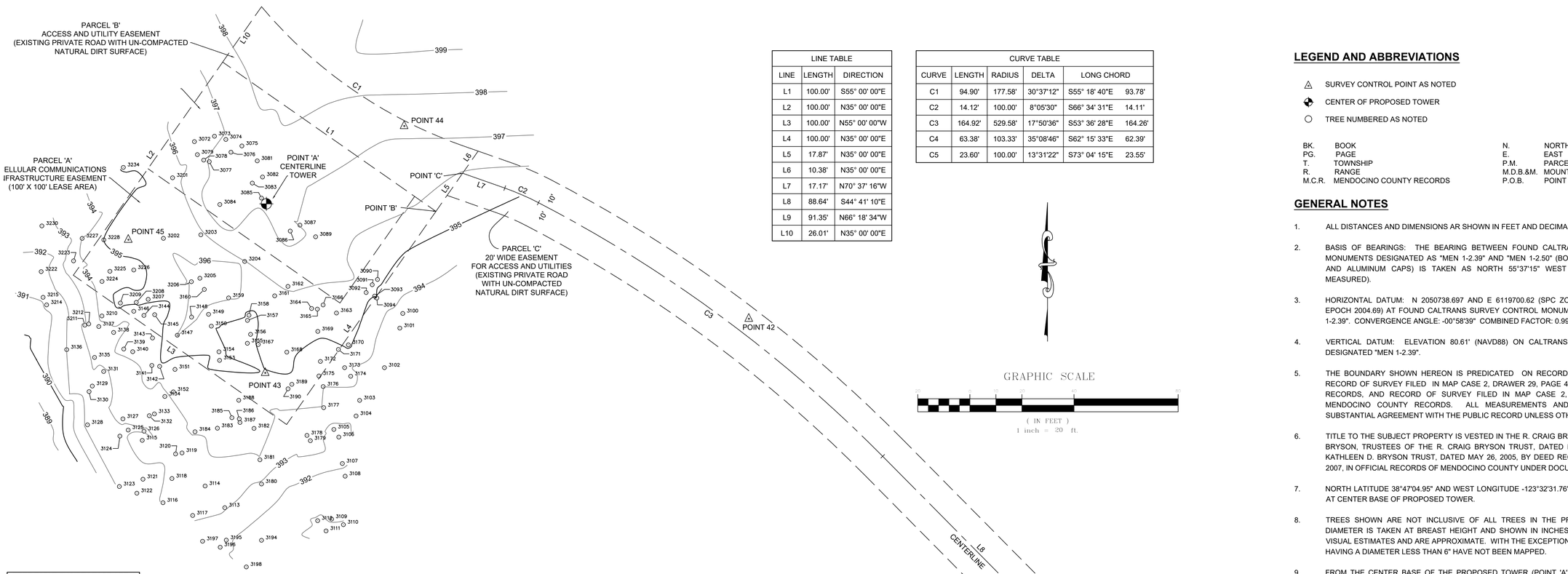

LINE TABLE		
LINE	LENGTH	DIRECTION
L1	100.00'	S55° 00' 00"E
L2	100.00'	N35° 00' 00"E
L3	100.00'	N55° 00' 00"W
L4	100.00'	N35° 00' 00"E
L5	17.87'	N35° 00' 00"E
L6	10.38'	N35° 00' 00"E
L7	17.17'	N70° 37' 16"W
L8	88.64'	S44° 41' 10"E
L9	91.35'	N66° 18' 34"W
L10	26.01'	N35° 00' 00"E

CURVE TABLE					
CURVE	LENGTH	RADIUS	DELTA	LONG CHORD	
C1	94.90'	177.58'	30°37'12"	S55° 18' 40"E	93.78'
C2	14.12'	100.00'	8°05'30"	S66° 34' 31"E	14.11'
C3	164.92'	529.58'	17°50'36"	S53° 36' 28"E	164.26'
C4	63.38'	103.33'	35°08'46"	S62° 15' 33"E	62.39'
C5	23.60'	100.00'	13°31'22"	S73° 04' 15"E	23.55'

LEGEND AND ABBREVIATIONS

△ SURVEY CONTROL POINT AS NOTED

CENTER OF PROPOSED TOWER

○ TREE NUMBERED AS NOTED

BK.	BOOK	N.	NORTH
PG.	PAGE	E.	EAST
T.	TOWNSHIP	P.M.	PARCEL MAP
R.	RANGE	M.D.B.&M.	MOUNT DIABLO BASE & MERIDIAN
M.C.R.	MENDOCINO COUNTY RECORDS	P.O.B.	POINT OF BEGINNING

GENERAL NOTES

1. ALL DISTANCES AND DIMENSIONS AR SHOWN IN FEET AND DECIMALS THEREOF.

2. BASIS OF BEARINGS: THE BEARING BETWEEN FOUND CALTRANS SURVEY CONTROL MONUMENTS DESIGNATED AS "MEN 1-2.39" AND "MEN 1-2.50" (BOTH FOUND 5/8" REBARS AND ALUMINUM CAPS) IS TAKEN AS NORTH 55°37'15" WEST 568.63' (RECORD AND MEASURED).

3. HORIZONTAL DATUM: N 2050738.697 AND E 6119700.62 (SPC ZONE 0402, NAD83 (1998), EPOCH 2004.69) AT FOUND CALTRANS SURVEY CONTROL MONUMENT DESIGNATED "MEN 1-2.39". CONVERGENCE ANGLE: -00°58'39" COMBINED FACTOR: 0.99993.

4. VERTICAL DATUM: ELEVATION 80.61' (NAVD88) ON CALTRANS CONTROL MONUMENT DESIGNATED "MEN 1-2.39".

5. THE BOUNDARY SHOWN HEREON IS PREDICATED ON RECORD DATA SHOWN ON THE RECORD OF SURVEY FILED IN MAP CASE 2, DRAWER 29, PAGE 45, MENDOCINO COUNTY RECORDS, AND RECORD OF SURVEY FILED IN MAP CASE 2, DRAWER 1, PAGE 82, MENDOCINO COUNTY RECORDS. ALL MEASUREMENTS AND DIMENSIONS ARE IN SUBSTANTIAL AGREEMENT WITH THE PUBLIC RECORD UNLESS OTHERWISE NOTED.

6. TITLE TO THE SUBJECT PROPERTY IS VESTED IN THE R. CRAIG BRYSON AND KATHLEEN D. BRYSON, TRUSTEES OF THE R. CRAIG BRYSON TRUST, DATED MAY 26, 2005, AND THE KATHLEEN D. BRYSON TRUST, DATED MAY 26, 2005, BY DEED RECORDED NOVEMBER 20, 2007, IN OFFICIAL RECORDS OF MENDOCINO COUNTY UNDER DOCUMENT NO. 2007-21077.

7. NORTH LATITUDE 38°47'04.95" AND WEST LONGITUDE -123°32'31.76" WITH ELEVATION 397.2' AT CENTER BASE OF PROPOSED TOWER.

8. TREES SHOWN ARE NOT INCLUSIVE OF ALL TREES IN THE PROPOSED LEASE AREA. DIAMETER IS TAKEN AT BREAST HEIGHT AND SHOWN IN INCHES. HEIGHTS SHOWN ARE VISUAL ESTIMATES AND ARE APPROXIMATE. WITH THE EXCEPTION OF REDWOODS, TREES HAVING A DIAMETER LESS THAN 6" HAVE NOT BEEN MAPPED.

9. FROM THE CENTER BASE OF THE PROPOSED TOWER (POINT 'A') THE SOUTH QUARTER CORNER OF SECTION 21, TOWNSHIP 11 NORTH, RANGE 15 WEST, MOUNT DIABLO BASELINE AND MERIDIAN, BEARS SOUTH 18°26'32" WEST 1749.86' DISTANT.

10. THERE ARE NO EXISTING STRUCTURES OR IMPROVEMENTS LOCATED WITHIN 300' OF THE PROJECT LOCATION. TREE HEIGHTS WITHIN THAT RADIUS GENERALLY RANGE FROM 135' TO 155'.

TREE TABLE (INSIDE LEASE AREA)		
NUMBER	SPECIES	DIAMETER
3072	FIR	6"
3073	FIR	8"
3074	FIR	10"
3075	REDWOOD	6" & 12"
3076	FIR	8"
3077	FIR	9"
3078	FIR	10"
3079	FIR	6"
3081	FIR	12"
3082	FIR	9"
3083	REDWOOD	6"
3084	FIR	9"
3085	FIR	8"
3086	REDWOOD	12"
3087	FIR	12"
3089	FIR	9"
3090	REDWOOD	14"
3091	REDWOOD	14"
3092	REDWOOD	24"
3144	REDWOOD	18"
3145	REDWOOD	6"
3146	REDWOOD	6"
3147	FIR	6"
3148	REDWOOD	12"
3149	REDWOOD	9"
3150	REDWOOD	6"
3153	REDWOOD	18"
3154	REDWOOD	4"
3155	REDWOOD	6"
3156	REDWOOD	6"
3157	OAK	12"
3158	OAK	6"
3159	OAK	12"
3160	REDWOOD	12"
3161	OAK	14"
3162	FIR	6"
3163	FIR	12"
3164	FIR	9"
3165	OAK	10"
3166	OAK	14"
3167	REDWOOD	14"
3168	REDWOOD	12"
3169	FIR	6"
3171	OAK	6"
3172	OAK	6"
3175	OAK	6"
3189	OAK	30"
3190	OAK	8"
3201	FIR	10"
3202	FIR	36"
3203	OAK	9"
3204	OAK	9"
3205	REDWOOD	20"
3206	REDWOOD	36"
3207	REDWOOD	30"
3208	REDWOOD	20"
3209	REDWOOD	28"
3224	FIR	14"
3225	FIR	10"
3226	FIR	8"
3228	FIR	6"

TREE TABLE (OUTSIDE LEASE AREA)		
NUMBER	SPECIES	DIAMETER
3093	REDWOOD	12"
3094	REDWOOD	24"
3100	FIR	9"
3101	FIR	9"
3102	FIR	10"
3103	REDWOOD	18"
3104	FIR	24"
3105	FIR	8"
3106	FIR	24"
3107	FIR	24"
3108	REDWOOD	24"
3109	REDWOOD	9" & 24"
3110	REDWOOD	14"
3111	REDWOOD	24"
3112	FIR	24"
3113	REDWOOD	24"
3114	REDWOOD	28"
3115	FIR	9"
3116	REDWOOD	24"
3117	FIR	15"
3118	FIR	6"
3119	REDWOOD	12"
3120	REDWOOD	6"
3121	REDWOOD	24"
3122	REDWOOD	24"
3123	FIR	15"
3124	FIR	15"
3125	OAK	6"
3126	OAK	6"
3127	FIR	9"
3128	FIR	12"
3129	REDWOOD	24"
3130	FIR	12"
3131	OAK	14"
3132	REDWOOD	10"
3133	FIR	8"
3134	OAK	12"
3135	OAK	10"
3136	OAK	6"
3137	REDWOOD	12" & 24"
3138	REDWOOD	14"
3139	REDWOOD	9" & 14"
3140	REDWOOD	9"
3141	REDWOOD	14"
3142	REDWOOD	9" & 14"
3143	REDWOOD	28"
3151	REDWOOD	24"
3152	OAK	6"
3170	PINE	24"
3173	OAK	12"
3174	FIR	10"
3176	REDWOOD	4"
3177	OAK	6" & 10"
3178	OAK	6"
3179	OAK	6"
3180	OAK	6"
3181	FIR	10"
3182	REDWOOD	30"
3183	FIR	20"

TREE TABLE (OUTSIDE LEASE AREA)		
NUMBER	SPECIES	DIAMETER
3184	FIR	10"
3185	OAK	24"
3186	OAK	18"
3187	OAK	6"
3188	FIR	6"
3194	OAK	12"
3195	FIR	30"
3196	FIR	14"
3197	REDWOOD	24"
3198	FIR	30"
3210	REDWOOD	20"
3211	OAK	9"
3212	OAK	6"
3214	FIR	12"
3215	FIR	6"
3222	FIR	6"
3223	FIR	9"
3227	FIR	6"
3230	FIR	12"
3234	FIR	14"

POINT TABLE				
POINT	NORTH	EAST	ELEVATION	DESCRIPTION
39	2,051,111.18	6,122,551.05	384.39	60D SPIKE
41	2,051,144.85	6,122,436.34	387.20	60D SPIKE
42	2,051,282.14	6,122,288.21	388.18	60D SPIKE
43	2,051,261.35	6,122,102.44	394.98	60D SPIKE
44	2,051,356.20	6,122,155.82	397.27	60D SPIKE
45	2,051,312.52	6,122,049.86	395.47	60D SPIKE
'A'	2,051,326.30	6,122,102.83	397.2	CENTER TOWER
'B'	2,051,323.42	6,122,086.56	NONE	P.O.B.
'C'	2,051,332.37	6,122,194.41	NONE	P.O.B.
'D'	2,051,093.68	6,122,563.32	NONE	P.O.B.

LANDS OF
BRYSON TRUST
DOC. 2007-21077, M.C.R.

KILLOPS LAND SURVEYING

SMITH RIVER CALIFORNIA

"Know Your Boundaries"

REVISIONS
ISSUE: 04/23/19
REV: 04/24/19
REV: 05/12/19
REV: 06/17/19

TOPOGRAPHIC SURVEY

TELESPAN COMMUNICATIONS, L.L.C.

LANDS OF R. CRAIG BRYSON & KATHLEEN D. BRYSON, TRUSTEES OF THE R. CRAIG BRYSON TRUST, DATED MAY 26, 2005, AND THE KATHLEEN D. BRYSON TRUST, DATED MAY 26, 2005
MENDOCINO COUNTY APN 145-070-01, GUALALA, CALIFORNIA

DATE APRIL 2019	
DRAWN BY MEK	CHECKED GAK
PROJECT NO. 16-297-05	
SHEET 2 OF 3 SHEETS	

POINT TABLE				
POINT	NORTH	EAST	ELEVATION	DESCRIPTION
32	2,050,180.82	6,121,559.30	184.46	PK NAIL
33	2,050,302.34	6,121,057.16	135.66	PK NAIL
34	2,050,185.05	6,121,947.26	219.60	PK NAIL
35	2,050,067.69	6,122,333.46	266.62	PK NAIL
36	2,050,198.06	6,122,473.62	290.96	60D SPIKE
37	2,050,730.09	6,122,458.90	352.40	60D SPIKE
38	2,050,969.67	6,122,508.32	373.47	60D SPIKE
46	2,050,402.10	6,120,674.67	109.27	PK NAIL
'A'	2,051,326.30	6,122,102.83	397.2	CENTER TOWER
'D'	2,051,093.68	6,122,563.32	NONE	P.O.B.
'E'	2,049,666.31	6,121,549.27	NONE	1/4 CORNER

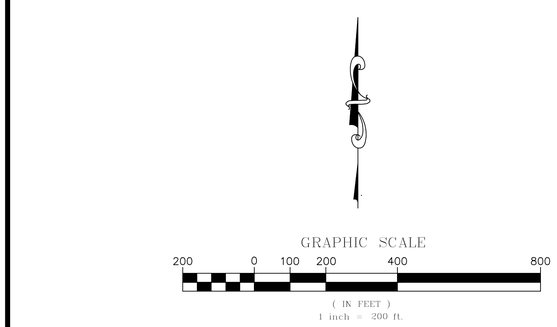

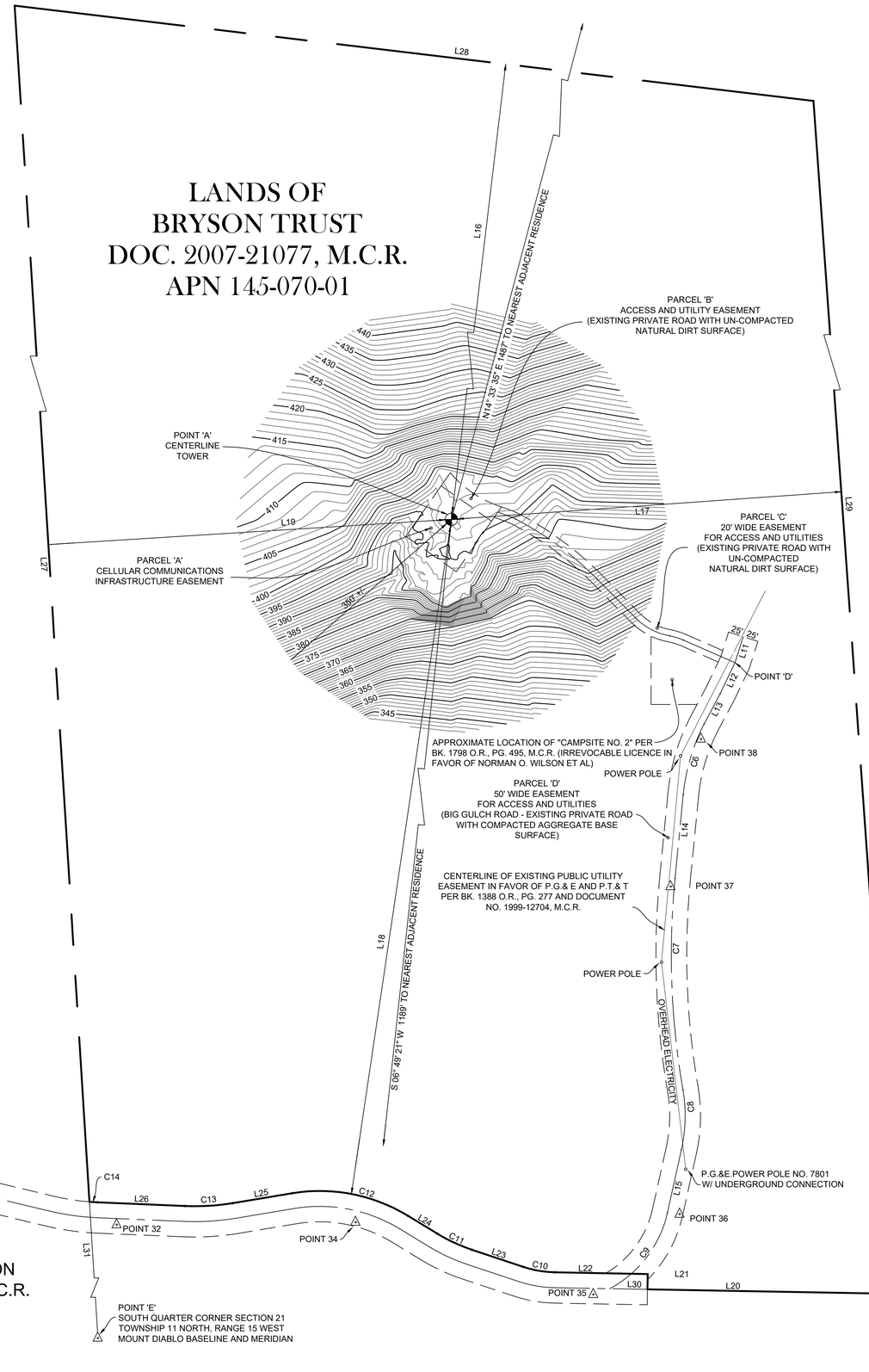

LEGEND AND ABBREVIATIONS

- SURVEY CONTROL POINT AS NOTED
- CENTER OF PROPOSED TOWER
- TREE NUMBERED AS NOTED

BK.	BOOK	N.	NORTH
PG.	PAGE	E.	EAST
T.	TOWNSHIP	P.M.	PARCEL MAP
R.	RANGE	M.D.B.&M.	MOUNT DIABLO BASE & MERIDIAN
M.C.R.	MENDOCINO COUNTY RECORDS	P.O.B.	POINT OF BEGINNING

GENERAL NOTES

1. ALL DISTANCES AND DIMENSIONS AR SHOWN IN FEET AND DECIMALS THEREOF.
2. BASIS OF BEARINGS: THE BEARING BETWEEN FOUND CALTRANS SURVEY CONTROL MONUMENTS DESIGNATED AS "MEN 1-2.39" AND "MEN 1-2.50" (BOTH FOUND 5/8" REBARS AND ALUMINUM CAPS) IS TAKEN AS NORTH 55°37'15" WEST 568.63' (RECORD AND MEASURED).
3. HORIZONTAL DATUM: N 2050738.697 AND E 6119700.62 (SPC ZONE 0402, NAD83 (1998), EPOCH 2004.69) AT FOUND CALTRANS SURVEY CONTROL MONUMENT DESIGNATED "MEN 1-2.39". CONVERGENCE ANGLE: -00°58'39" COMBINED FACTOR: 0.99993.
4. VERTICAL DATUM: ELEVATION 80.61' (NAVD88) ON CALTRANS CONTROL MONUMENT DESIGNATED "MEN 1-2.39".
5. THE BOUNDARY SHOWN HEREON IS PREDICATED ON RECORD DATA SHOWN ON THE RECORD OF SURVEY FILED IN MAP CASE 2, DRAWER 29, PAGE 45, MENDOCINO COUNTY RECORDS, AND RECORD OF SURVEY FILED IN MAP CASE 2, DRAWER 1, PAGE 82, MENDOCINO COUNTY RECORDS. ALL MEASUREMENTS AND DIMENSIONS ARE IN SUBSTANTIAL AGREEMENT WITH THE PUBLIC RECORD UNLESS OTHERWISE NOTED.
6. TITLE TO THE SUBJECT PROPERTY IS VESTED IN THE R. CRAIG BRYSON AND KATHLEEN D. BRYSON, TRUSTEES OF THE R. CRAIG BRYSON TRUST, DATED MAY 26, 2005, AND THE KATHLEEN D. BRYSON TRUST, DATED MAY 26, 2005, BY DEED RECORDED NOVEMBER 20, 2007, IN OFFICIAL RECORDS OF MENDOCINO COUNTY UNDER DOCUMENT NO. 2007-21077.
7. NORTH LATITUDE 38°47'04.95" AND WEST LONGITUDE -123°32'31.76" WITH ELEVATION 397.2' AT CENTER BASE OF PROPOSED TOWER.
8. TREES SHOWN ARE NOT INCLUSIVE OF ALL TREES IN THE PROPOSED LEASE AREA. DIAMETER IS TAKEN AT BREAST HEIGHT AND SHOWN IN INCHES. HEIGHTS SHOWN ARE VISUAL ESTIMATES AND ARE APPROXIMATE. WITH THE EXCEP'TION OF REDWOODS, TREES HAVING A DIAMETER LESS THAN 6" HAVE NOT BEEN MAPPED.
9. THERE ARE NO EXISTING STRUCTURES OR IMPROVEMENTS LOCATED WITHIN 300' OF THE PROJECT LOCATION. TREE HEIGHTS WITHIN THAT RADIUS GENERALLY RANGE FROM 135' TO 155'.
10. BIG GULCH ROAD IS SUBJECT TO A PRIVATE EASEMENT FOR ROAD AND UTILITY PURPOSES PER BK. 562 O.R., PG. 571, BK. 562 O.R., PG. 577 AND PG. 1062 O.R., PG. 200, M.C.R.

CURVE TABLE					
CURVE	LENGTH	RADIUS	DELTA	LONG CHORD	
C6	120.25'	316.60'	21°45'41"	S16° 28' 28"W	119.53'
C7	344.31'	1276.95'	15°26'56"	S02° 07' 51"E	343.27'
C8	97.68'	250.00'	22°23'10"	S01° 20' 16"W	97.06'
C9	160.05'	186.28'	49°13'39"	S37° 08' 40"W	155.17'
C10	53.18'	175.00'	17°24'40"	N80° 16' 15"W	52.98'
C11	61.94'	275.00'	12°54'20"	N65° 06' 45"W	61.81'
C12	195.83'	275.00'	40°48'00"	N79° 03' 35"W	191.72'
C13	77.70'	375.00'	11°52'20"	S86° 28' 35"W	77.56'
C14	13.20'	375.00'	02°01'01"	N86° 34' 44"W	13.20'

LINE TABLE		
LINE	LENGTH	DIRECTION
L11	44.25'	S17° 42' 18"W
L12	55.84'	S25° 34' 17"W
L13	55.38'	S27° 58' 10"W
L14	137.10'	S05° 35' 37"W
L15	105.04'	S12° 31' 50"W
L16	744.47'	N06° 47' 54"E
L17	634.75'	N85° 56' 10"E
L18	1107.19'	S08° 54' 29"W
L19	656.01'	S86° 25' 28"W
L20	407.40'	N88° 58' 35"W
L21	25.00'	N01° 01' 25"W
L22	150.00'	N88° 58' 35"W
L23	88.11'	N71° 33' 55"W
L24	56.16'	N58° 39' 35"W
L25	97.09'	S80° 32' 25"W
L26	142.58'	N87° 35' 15"W
L27	2170.40'	N03° 34' 32"W
L28	1304.72'	S83° 12' 06"E
L29	2166.62'	S04° 03' 52"W
L30	61.23'	S88° 58' 35"E
L31	522.87'	S03° 34' 32"E

KILLOPS LAND SURVEYING
SMITH RIVER CALIFORNIA
"Know Your Boundaries"

REVISIONS
ISSUE: 04/23/19
REV: 04/24/19
REV: 05/12/19
REV: 06/17/19
REV: 06/24/19

TOPOGRAPHIC SURVEY

TELESPAN COMMUNICATIONS, L.L.C.
LANDS OF R. CRAIG BRYSON & KATHLEEN D. BRYSON, TRUSTEES OF THE R. CRAIG BRYSON TRUST, DATED MAY 26, 2005, AND THE KATHLEEN D. BRYSON TRUST, DATED MAY 26, 2005
MENDOCINO COUNTY APN 145-070-01, GUALALA, CALIFORNIA

DATE APRIL 2019
DRAWN BY MEK | CHECKED GAK
PROJECT NO. 16-297-05
SHEET 3 OF 3 SHEETS

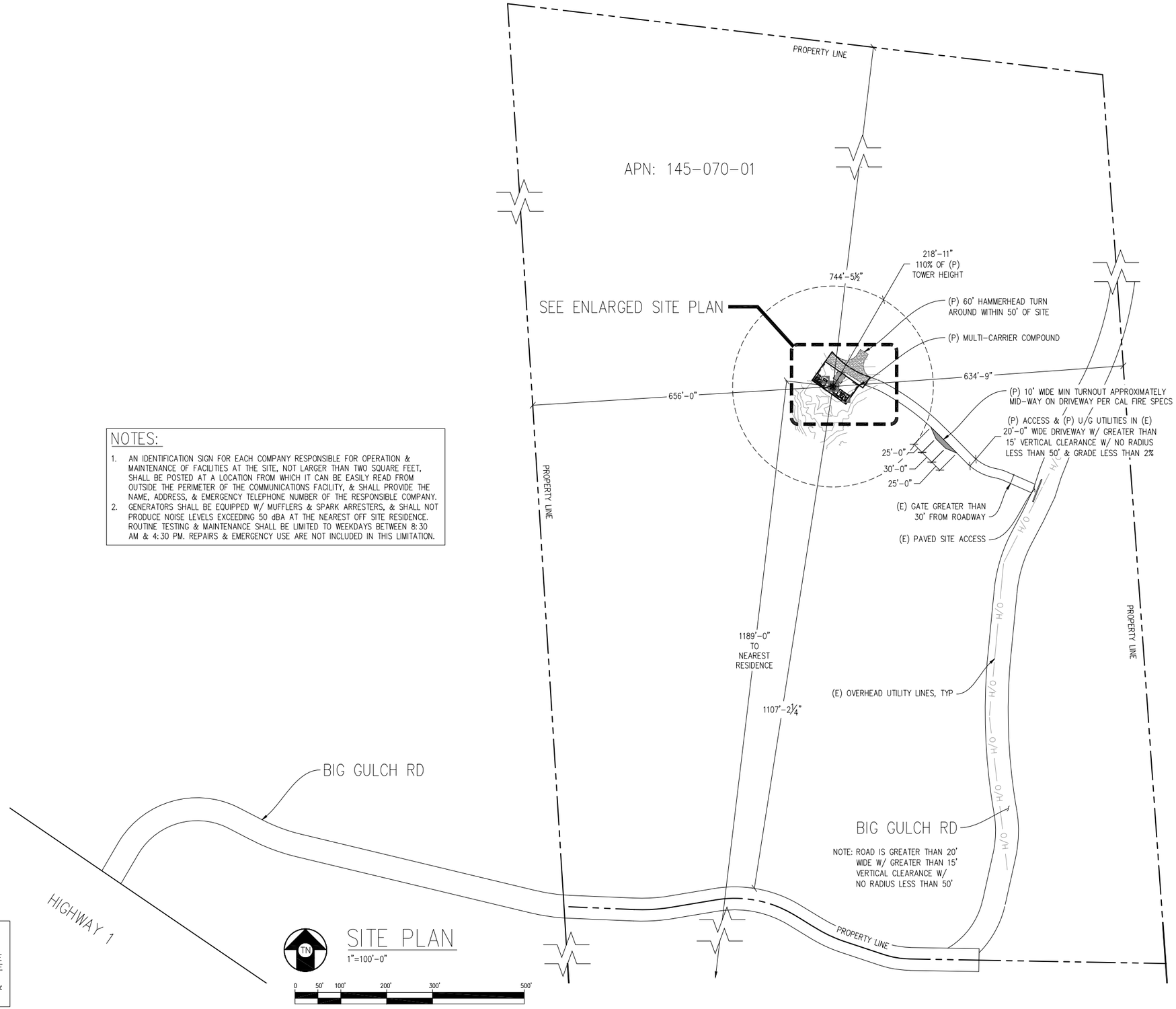

SITE PLAN
1"=100'-0"

NOTES:

1. AN IDENTIFICATION SIGN FOR EACH COMPANY RESPONSIBLE FOR OPERATION & MAINTENANCE OF FACILITIES AT THE SITE, NOT LARGER THAN TWO SQUARE FEET, SHALL BE POSTED AT A LOCATION FROM WHICH IT CAN BE EASILY READ FROM OUTSIDE THE PERIMETER OF THE COMMUNICATIONS FACILITY, & SHALL PROVIDE THE NAME, ADDRESS, & EMERGENCY TELEPHONE NUMBER OF THE RESPONSIBLE COMPANY.
2. GENERATORS SHALL BE EQUIPPED W/ MUFFLERS & SPARK ARRESTERS, & SHALL NOT PRODUCE NOISE LEVELS EXCEEDING 50 dBA AT THE NEAREST OFF SITE RESIDENCE. ROUTINE TESTING & MAINTENANCE SHALL BE LIMITED TO WEEKDAYS BETWEEN 8:30 AM & 4:30 PM. REPAIRS & EMERGENCY USE ARE NOT INCLUDED IN THIS LIMITATION.

NOTES:

1. SURROUNDING TREE HEIGHTS WITHIN 200' OF THE PROJECT LOCATION AVERAGE APPROXIMATELY 155'

NOTICE

NEW MONOPINE TO BE ANALYZED BY OTHERS. STREAMLINE ENGINEERING & DESIGN INC. IS NOT RESPONSIBLE FOR THE EVALUATION OF THE NEW POLE, BASE PLATE, ANCHOR BOLTS, FOUNDATION OR ANTENNA/RRU MOUNT FRAMING & CONNECTIONS FOR THE NEW LOADING CONDITIONS.

GUALALA WIRELESS COLLOCATION

HIGHWAY 1
GUALALA, CA 95445

ISSUE STATUS

△	DATE	DESCRIPTION	BY
	06/12/19	ZD 100%	–
	08/01/19	CLIENT REV	–
	08/05/19	CLIENT REV	–
	–	–	–
	–	–	–
	–	–	–

DRAWN BY: J. SMITH
CHECKED BY: K. SORENSEN
APPROVED BY: –
DATE: 08/05/19

Streamline Engineering and Design, Inc.
8445 Sierra College Blvd, Suite E Granite Bay, CA 95746
Contact: Larry Houghtby Phone: 916-275-4180
E-Mail: larry@streamlineeng.com Fax: 916-660-1941

PRELIMINARY:
NOT FOR
CONSTRUCTION

KEVIN R. SORENSEN
S4469

TeleSpan COMMUNICATIONS
3888 STATE ST, STE# 204
SANTA BARBARA, CA 93105

SHEET TITLE:
SITE PLAN

SHEET NUMBER:
A-1

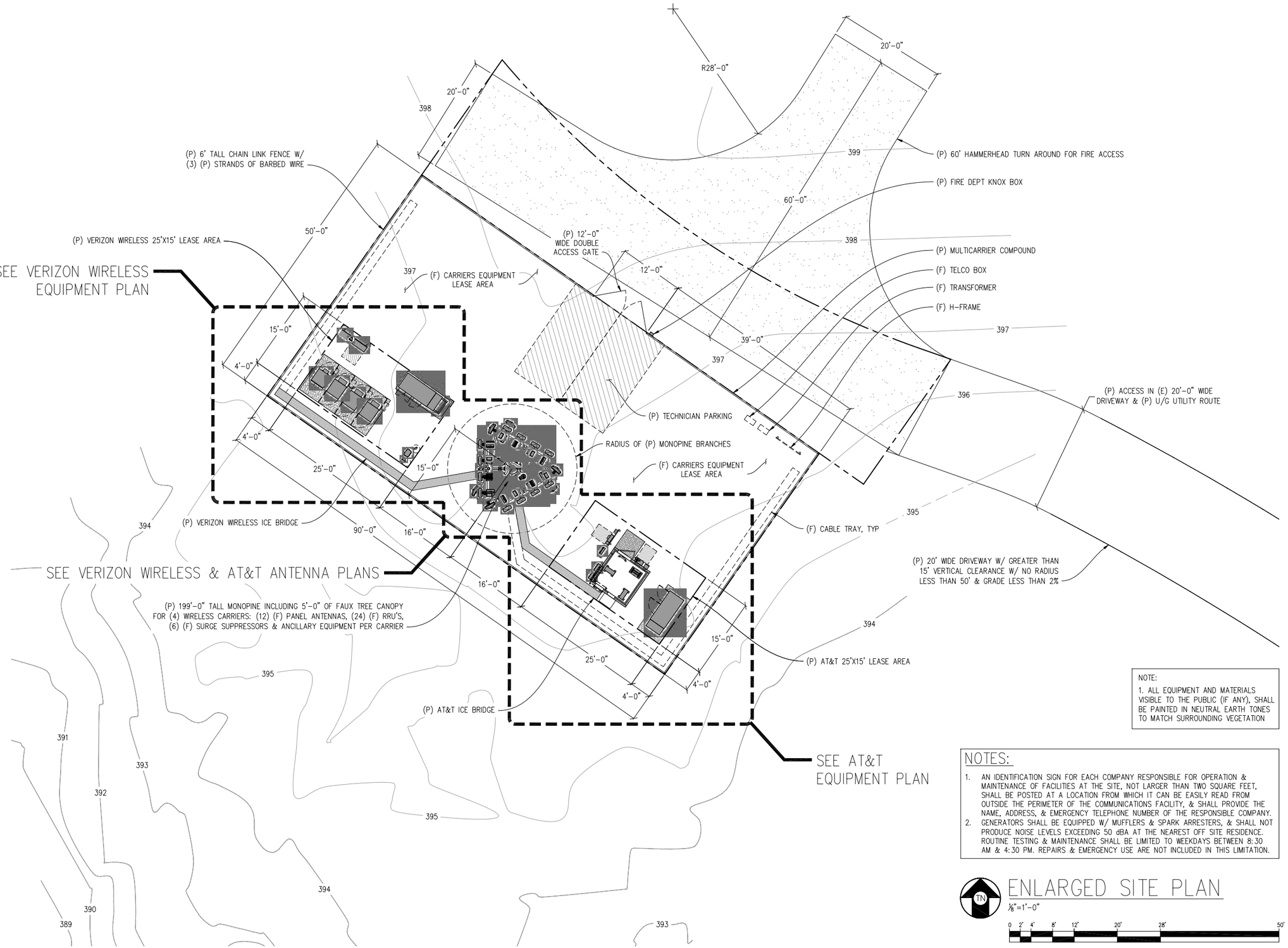

NOTE:

1. ALL EQUIPMENT AND MATERIALS VISIBLE TO THE PUBLIC (IF ANY), SHALL BE PAINTED IN NEUTRAL EARTH TONES TO MATCH SURROUNDING VEGETATION

NOTES:

1. AN IDENTIFICATION SIGN FOR EACH COMPANY RESPONSIBLE FOR OPERATION & MAINTENANCE OF FACILITIES AT THE SITE, NOT LARGER THAN TWO SQUARE FEET, SHALL BE POSTED AT A LOCATION FROM WHICH IT CAN BE EASILY READ FROM OUTSIDE THE PERIMETER OF THE COMMUNICATIONS FACILITY, & SHALL PROVIDE THE NAME, ADDRESS, & EMERGENCY TELEPHONE NUMBER OF THE RESPONSIBLE COMPANY.
2. GENERATORS SHALL BE EQUIPPED W/ MUFFLERS & SPARK ARRESTERS, & SHALL NOT PRODUCE NOISE LEVELS EXCEEDING 50 dBA AT THE NEAREST OFF SITE RESIDENCE. ROUTINE TESTING & MAINTENANCE SHALL BE LIMITED TO WEEKDAYS BETWEEN 8:30 AM & 4:30 PM. REPAIRS & EMERGENCY USE ARE NOT INCLUDED IN THIS LIMITATION.

TN

ENLARGED SITE PLAN

1/8"=1'-0"

0 2' 4' 8' 12' 20' 28' 50'

GUALALA WIRELESS COLLOCATION

HIGHWAY 1
GUALALA, CA 95445

ISSUE STATUS

△	DATE	DESCRIPTION	BY
	06/12/19	ZD 100%	–
	08/01/19	CLIENT REV	–
	08/05/19	CLIENT REV	–
	–	–	–
	–	–	–
	–	–	–

DRAWN BY: J. SMITH
CHECKED BY: K. SORENSEN
APPROVED BY: –
DATE: 08/05/19

Streamline Engineering and Design, Inc.
8445 Sierra College Blvd, Suite E Granite Bay, CA 95746
Contact: Larry Houghtby Phone: 916-275-4180
E-Mail: larry@streamlineeng.com Fax: 916-660-1941

PRELIMINARY:
NOT FOR
CONSTRUCTION

KEVIN R. SORENSEN
S4469

TeleSpan COMMUNICATIONS
3888 STATE ST, STE# 204
SANTA BARBARA, CA 93105

SHEET TITLE:
ENLARGED SITE PLAN

SHEET NUMBER:
A-2

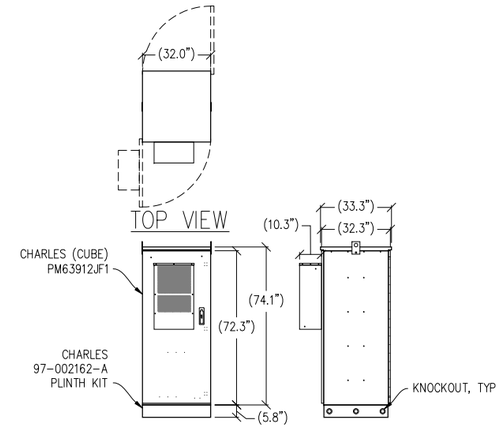

1 MISC CABINET DETAIL

⅜"=1'-0" WEIGHT: 500 LBS

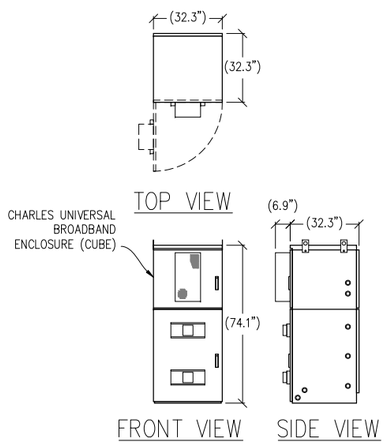

2 BATTERY CABINET DETAIL

⅜"=1'-0" WEIGHT: 2,439 LBS

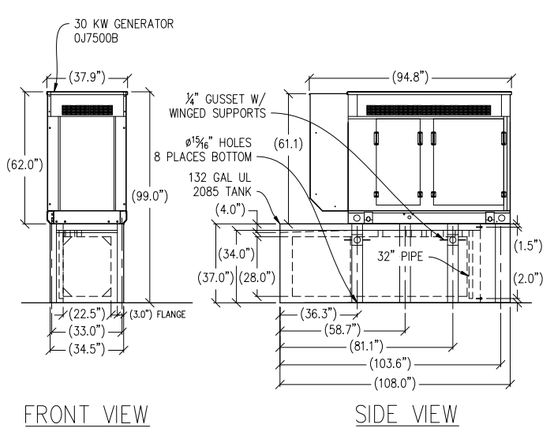

3 30KW GENERATOR DETAIL

⅜"=1'-0" MAX WEIGHT: 3,230 LBS

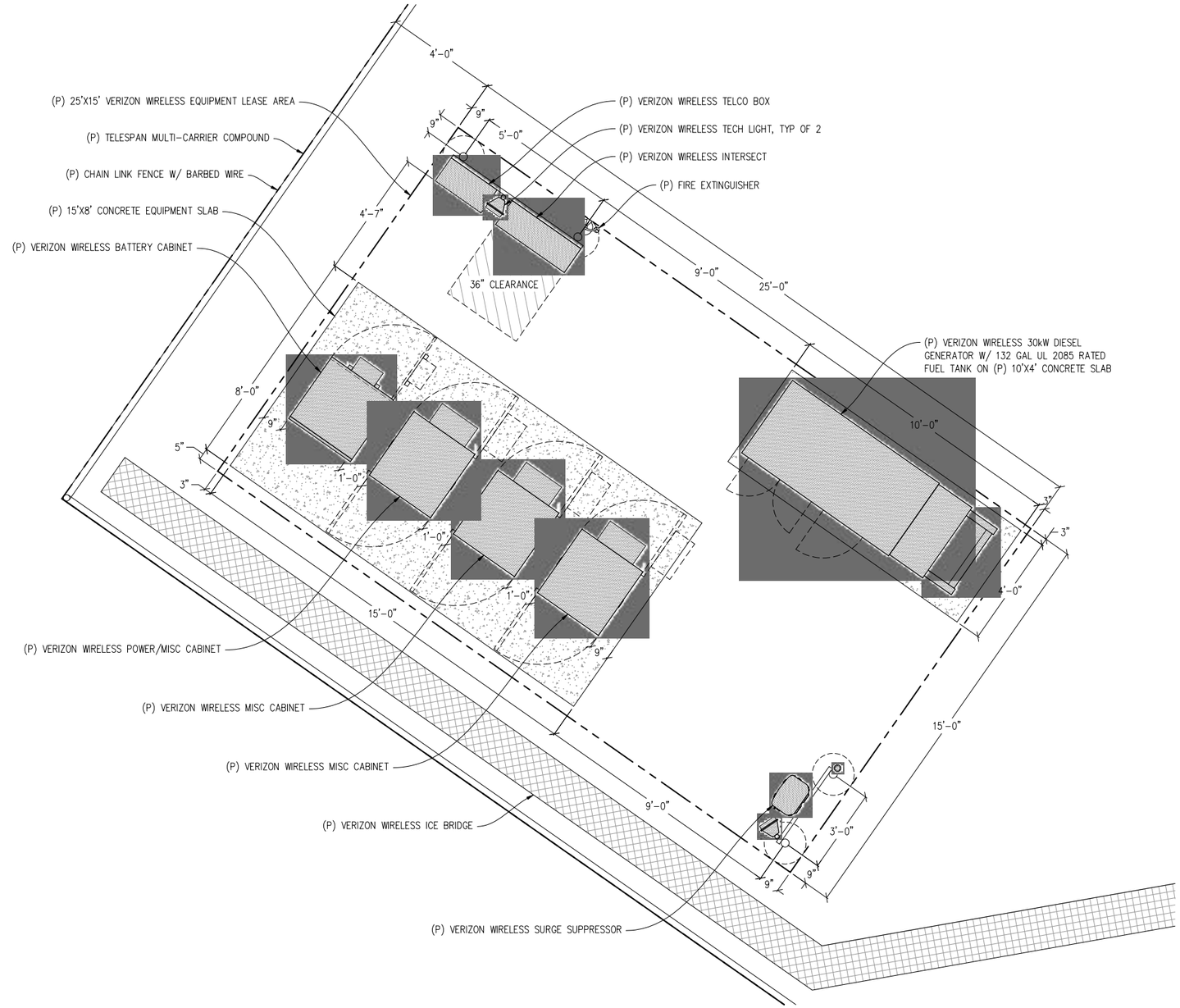

TN

EQUIPMENT PLAN

½"=1'-0"

0 6" 1' 2' 3' 5' 7' 10'

GUALALA WIRELESS COLLOCATION

HIGHWAY 1
GUALALA, CA 95445

ISSUE STATUS

△	DATE	DESCRIPTION	BY
	06/12/19	ZD 100%	–
	08/01/19	CLIENT REV	–
	08/05/19	CLIENT REV	–
	–	–	–
	–	–	–
	–	–	–

DRAWN BY: J. SMITH

CHECKED BY: K. SORENSEN

APPROVED BY: –

DATE: 08/05/19

Streamline Engineering and Design, Inc.
8445 Sierra College Blvd, Suite E Granite Bay, CA 95746
Contact: Larry Houghtby Phone: 916-275-4180
E-Mail: larry@streamlineeng.com Fax: 916-660-1941

PRELIMINARY:
NOT FOR
CONSTRUCTION

KEVIN R. SORENSEN
S4469

TeleSpan COMMUNICATIONS
3888 STATE ST, STE# 204
SANTA BARBARA, CA 93105

SHEET TITLE:

VERIZON WIRELESS
EQUIPMENT PLAN

SHEET NUMBER:

A-3

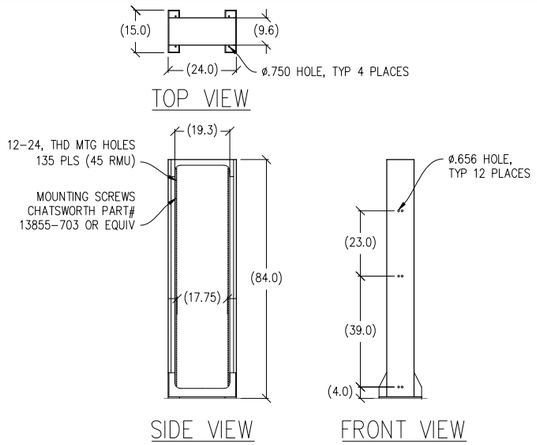

1 19" SEISMIC RACK DETAIL

½"=1'-0" MAX WEIGHT: 1158 LBS

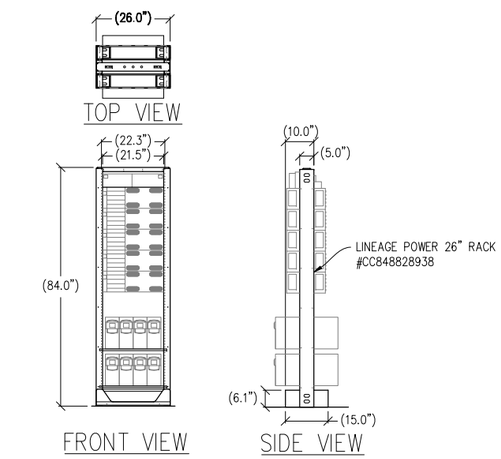

2 DC POWER 26" RACK DETAIL

½"=1'-0" MAX WEIGHT: 1150 LBS

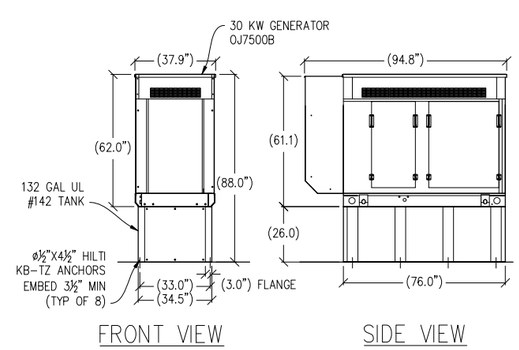

3 30KW GENERATOR DETAIL

⅜"=1'-0" MAX WEIGHT: 3,230 LBS

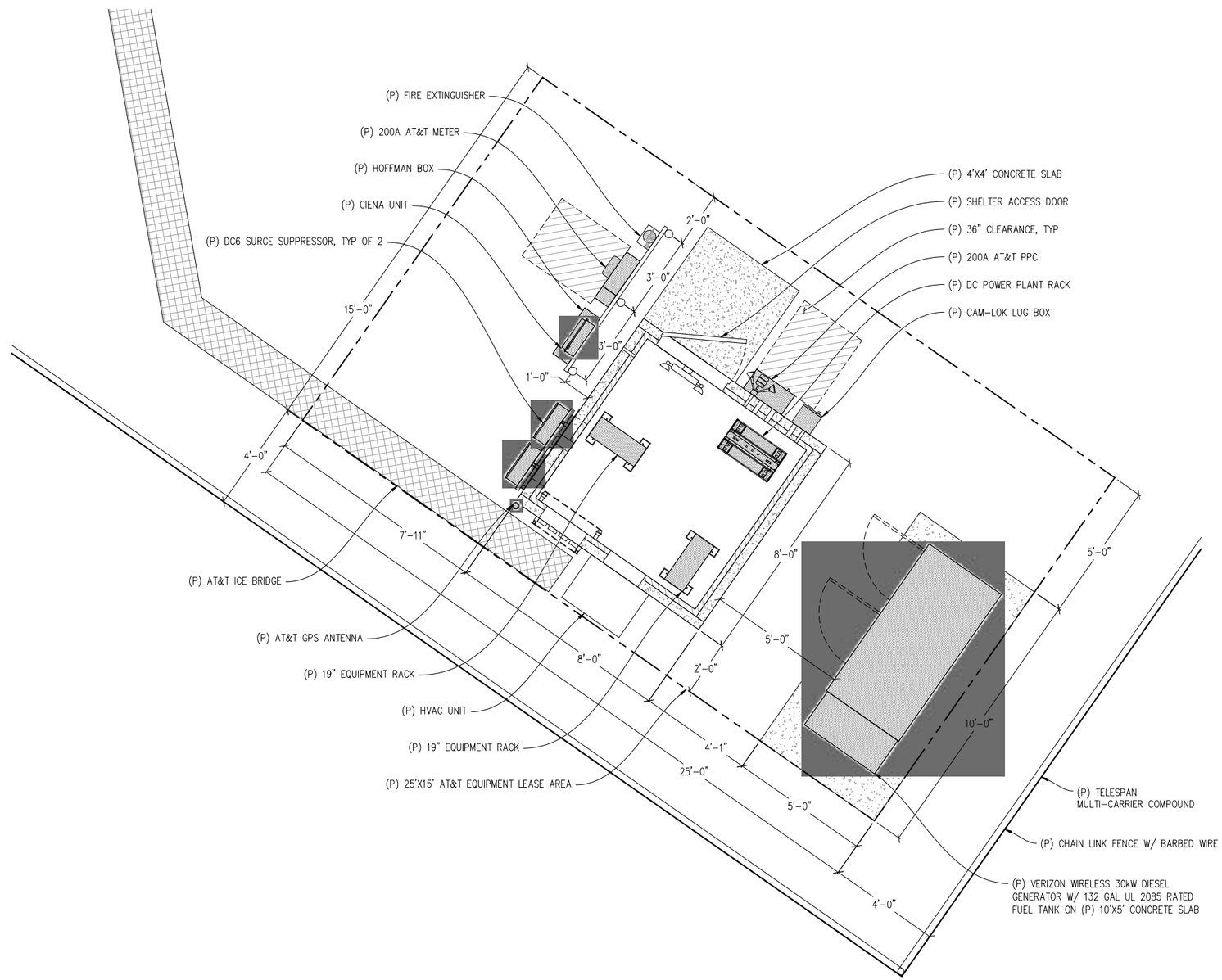

TN

EQUIPMENT PLAN

½"=1'-0"

0 6" 1' 2' 3' 5' 7' 10'

GUALALA WIRELESS COLLOCATION

HIGHWAY 1
GUALALA, CA 95445

ISSUE STATUS

△	DATE	DESCRIPTION	BY
	06/12/19	ZD 100%	–
	08/01/19	CLIENT REV	–
	08/05/19	CLIENT REV	–
	–	–	–
	–	–	–
	–	–	–

DRAWN BY: J. SMITH

CHECKED BY: K. SORENSEN

APPROVED BY: –

DATE: 08/05/19

Streamline Engineering and Design, Inc.
8445 Sierra College Blvd, Suite E Granite Bay, CA 95746
Contact: Larry Houghtby Phone: 916-275-4180
E-Mail: larry@streamlineeng.com Fax: 916-660-1941

PRELIMINARY:
NOT FOR
CONSTRUCTION

KEVIN R. SORENSEN
S4469

TeleSpan COMMUNICATIONS

3888 STATE ST, STE# 204
SANTA BARBARA, CA 93105

SHEET TITLE:

AT&T
EQUIPMENT PLAN

SHEET NUMBER:

A-4

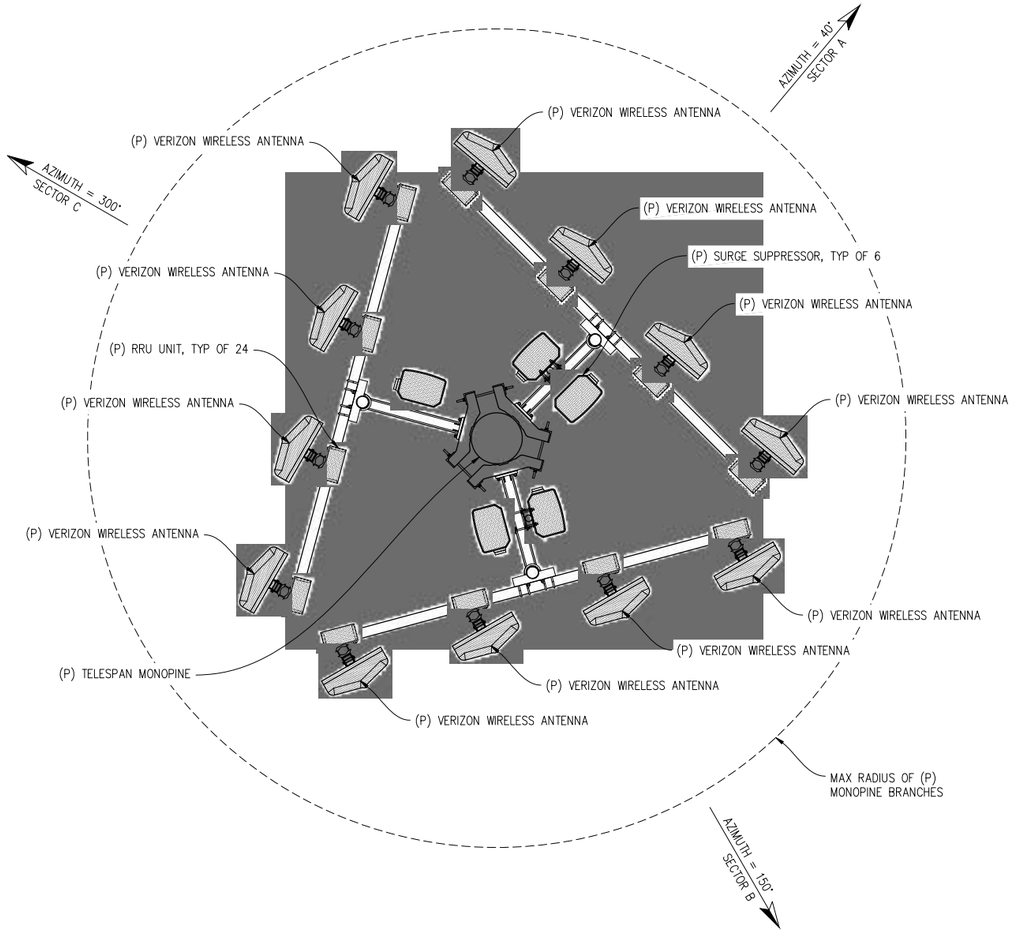

ANTENNA PLAN

½"=1'-0"

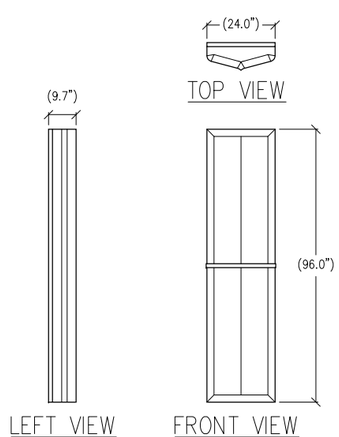

1 ANTENNA DETAIL

½"=1'-0" MAX WEIGHT: 85.0 LBS

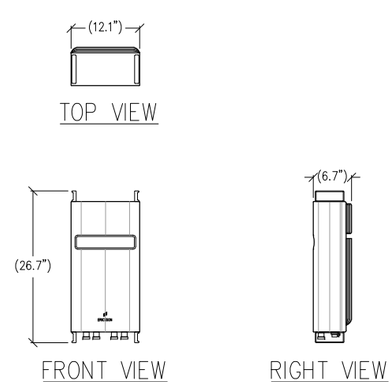

2 RRU DETAIL

1"=1'-0" MAX WEIGHT: 50.7 LBS

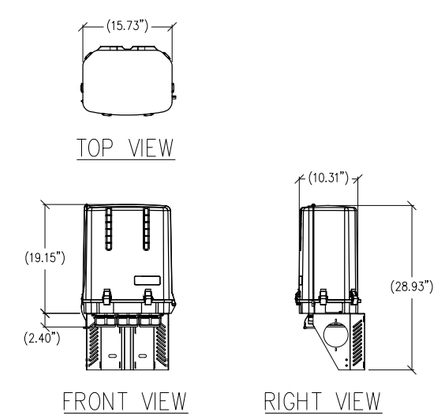

3 SURGE PROTECTION BOX

1"=1'-0" MAX WEIGHT: 32.0 LBS

GUALALA WIRELESS COLLOCATION

HIGHWAY 1
GUALALA, CA 95445

ISSUE STATUS

△	DATE	DESCRIPTION	BY
	06/12/19	ZD 100%	–
	08/01/19	CLIENT REV	–
	08/05/19	CLIENT REV	–
	–	–	–
	–	–	–
	–	–	–

DRAWN BY: J. SMITH
CHECKED BY: K. SORENSEN
APPROVED BY: –
DATE: 08/05/19

Streamline Engineering and Design, Inc.
8445 Sierra College Blvd, Suite E Granite Bay, CA 95746
Contact: Larry Houghtby Phone: 916-275-4180
E-Mail: larry@streamlineeng.com Fax: 916-660-1941

PRELIMINARY:
NOT FOR
CONSTRUCTION

KEVIN R. SORENSEN
S4469

TeleSpan COMMUNICATIONS
3888 STATE ST, STE# 204
SANTA BARBARA, CA 93105

SHEET TITLE:
VERIZON WIRELESS ANTENNA PLAN

SHEET NUMBER:
A-5

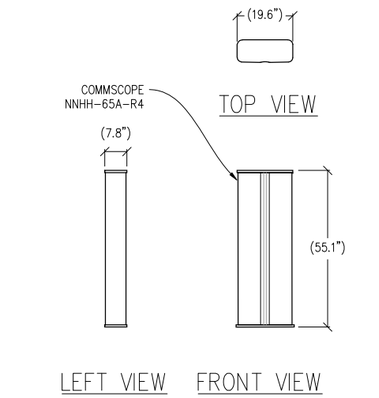

1 (P) ANTENNA DETAIL
½"=1'-0"
MAX WEIGHT: 67.2 LBS

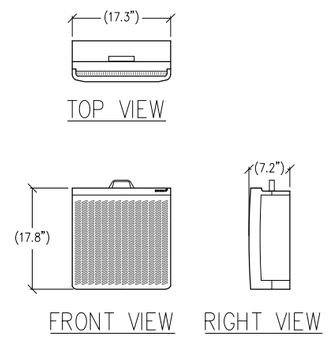

2 (P) RRUS-11 DETAIL
1"=1'-0"
MAX WEIGHT: 50 LBS

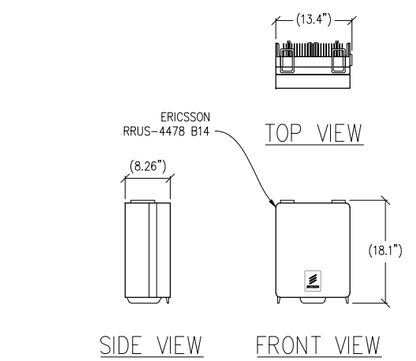

3 (P) RRUS-4478 B14 DETAIL
1"=1'-0"
MAX WEIGHT: 59.4 LBS

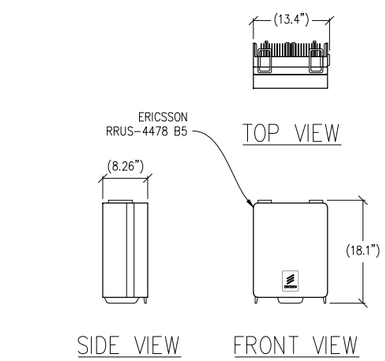

4 (P) RRUS-4478 B5 DETAIL
1"=1'-0"
MAX WEIGHT: 59.4 LBS

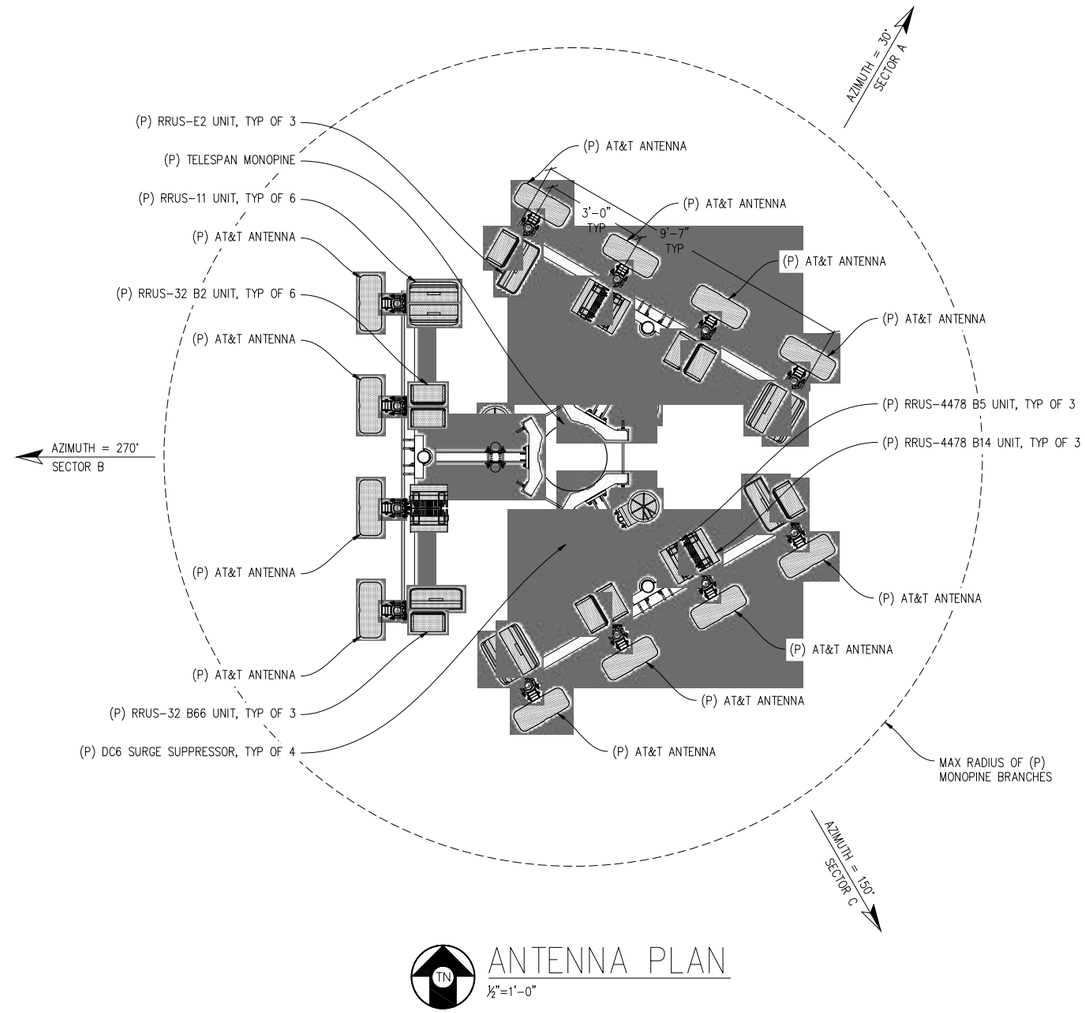

TN
ANTENNA PLAN
½"=1'-0"

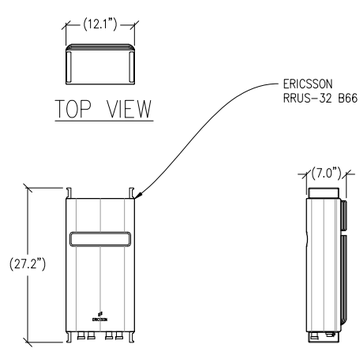

5 (P) RRUS-32 B66 DETAIL
1"=1'-0"
MAX WEIGHT: 52.9 LBS

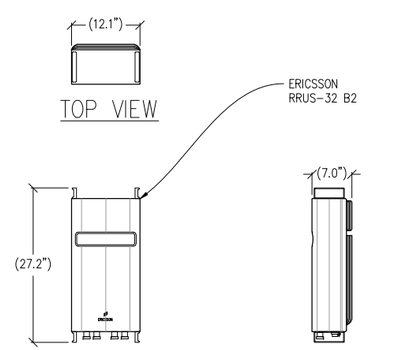

6 (P) RRUS-32 B2 DETAIL
1"=1'-0"
MAX WEIGHT: 52.9 LBS

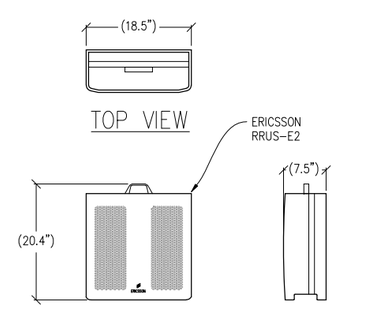

7 (P) RRUS-E2 DETAIL
1"=1'-0"
MAX WEIGHT: 60 LBS

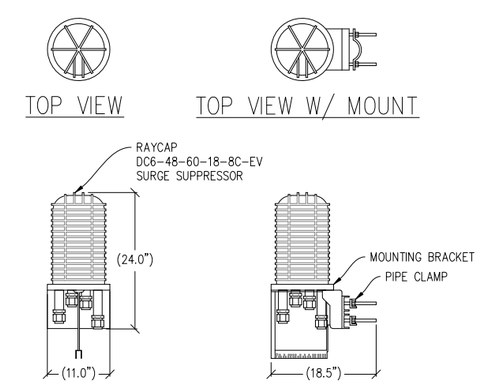

8 (P) SURGE SUPPRESSOR DTL
1"=1'-0"
MAX WEIGHT = TBD

GUALALA WIRELESS COLLOCATION

HIGHWAY 1
GUALALA, CA 95445

ISSUE STATUS

△	DATE	DESCRIPTION	BY
	06/12/19	ZD 100%	–
	08/01/19	CLIENT REV	–
	08/05/19	CLIENT REV	–
	–	–	–
	–	–	–
	–	–	–

DRAWN BY: J. SMITH
CHECKED BY: K. SORENSEN
APPROVED BY: –
DATE: 08/05/19

Streamline Engineering and Design, Inc.
8445 Sierra College Blvd, Suite E Granite Bay, CA 95746
Contact: Larry Houghtby Phone: 916-275-4180
E-Mail: larry@streamlineeng.com Fax: 916-660-1941

PRELIMINARY:
NOT FOR
CONSTRUCTION

KEVIN R. SORENSEN
S4469

TeleSpan COMMUNICATIONS
3888 STATE ST, STE# 204
SANTA BARBARA, CA 93105

SHEET TITLE:
AT&T
ANTENNA PLAN

SHEET NUMBER:
A-6

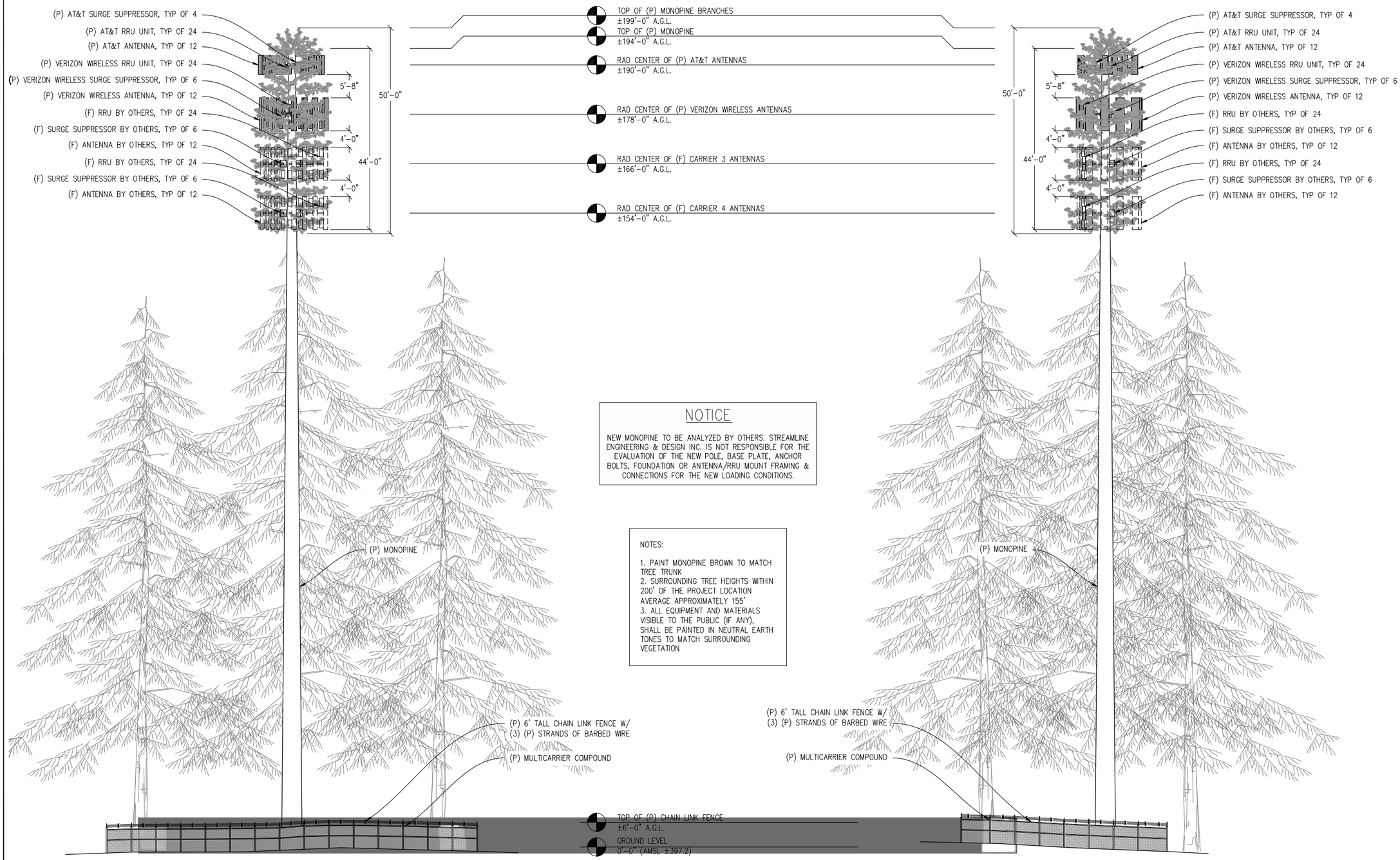

SOUTHWEST ELEVATION

3/32"=1'-0"

NORTHWEST ELEVATION

3/32"=1'-0"

GUALALA WIRELESS COLLOCATION

HIGHWAY 1
GUALALA, CA 95445

ISSUE STATUS

△	DATE	DESCRIPTION	BY
	06/12/19	ZD 100%	–
	08/01/19	CLIENT REV	–
	08/05/19	CLIENT REV	–
	–	–	–
	–	–	–
	–	–	–

DRAWN BY: J. SMITH

CHECKED BY: K. SORENSEN

APPROVED BY: –

DATE: 08/05/19

Streamline Engineering and Design, Inc.
8445 Sierra College Blvd, Suite E Granite Bay, CA 95746
Contact: Larry Houghtby Phone: 916-275-4180
E-Mail: larry@streamlineeng.com Fax: 916-660-1941

PRELIMINARY:
NOT FOR
CONSTRUCTION

KEVIN R. SORENSEN
S4469

TeleSpan COMMUNICATIONS

3888 STATE ST, STE# 204
SANTA BARBARA, CA 93105

SHEET TITLE:

ELEVATIONS

SHEET NUMBER:

A-7

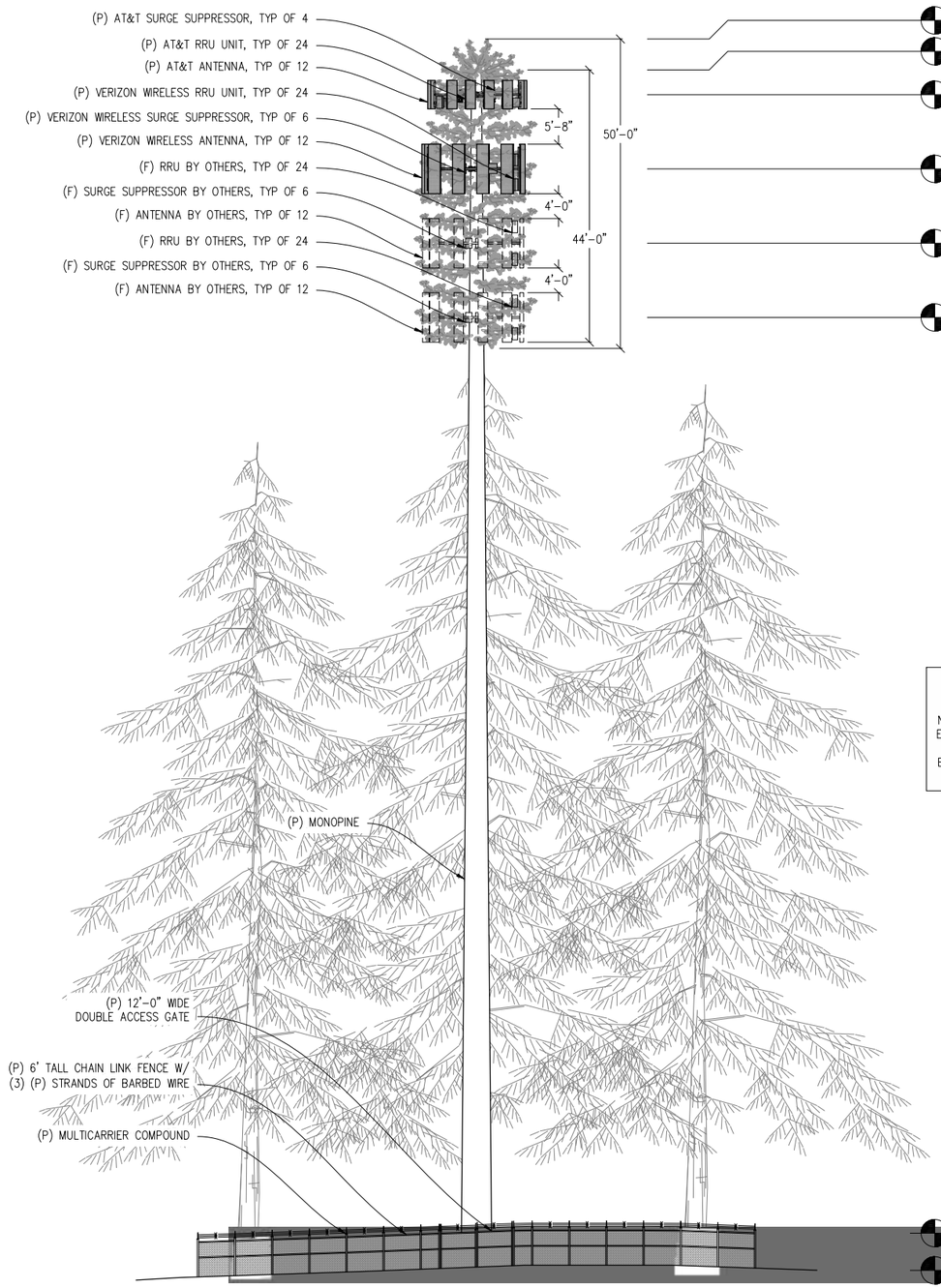

NORTHEAST ELEVATION

3/32"=1'-0"

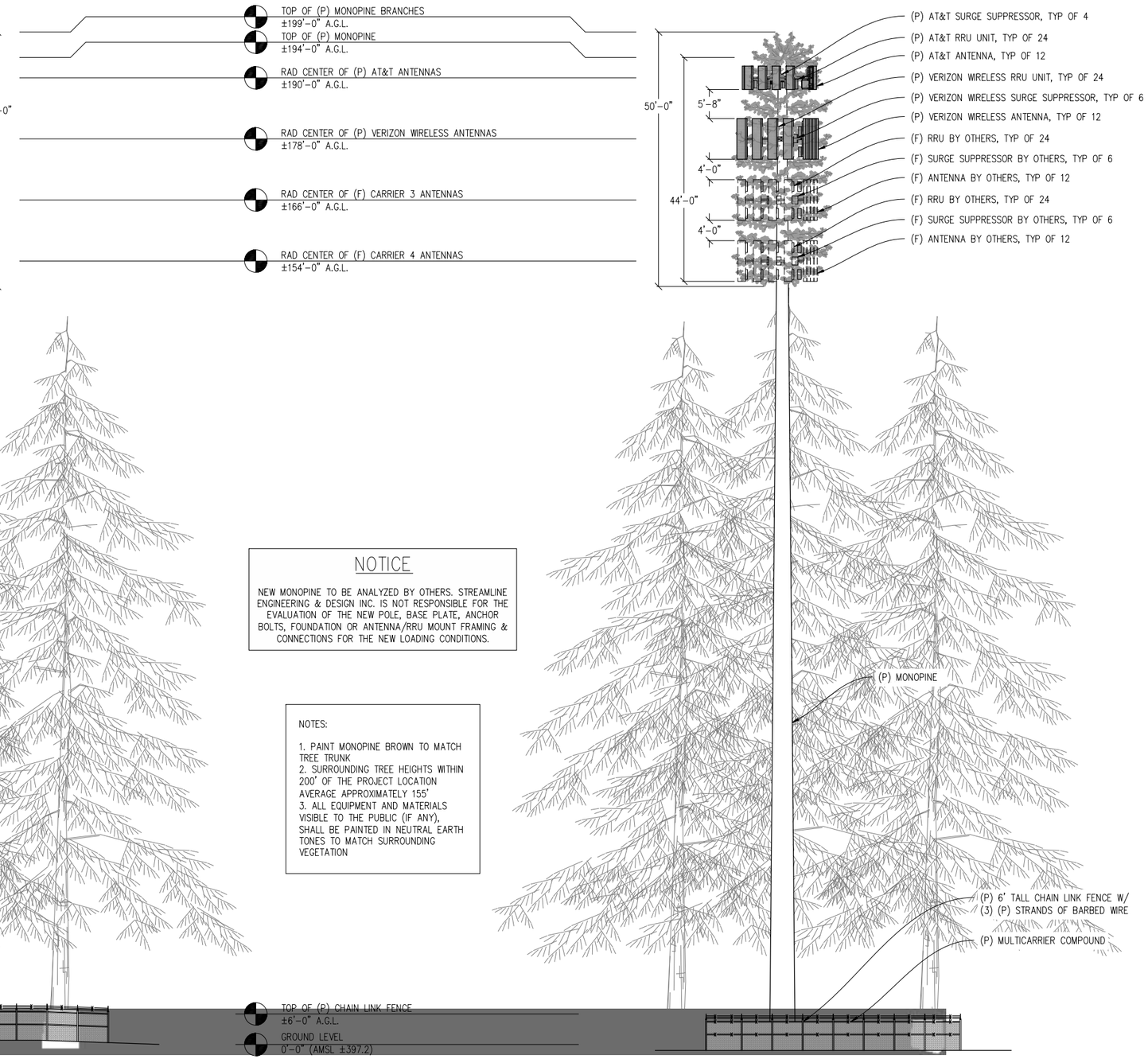

SOUTHEAST ELEVATION

3/32"=1'-0"

NOTICE

NEW MONOPINE TO BE ANALYZED BY OTHERS. STREAMLINE ENGINEERING & DESIGN INC. IS NOT RESPONSIBLE FOR THE EVALUATION OF THE NEW POLE, BASE PLATE, ANCHOR BOLTS, FOUNDATION OR ANTENNA/RRU MOUNT FRAMING & CONNECTIONS FOR THE NEW LOADING CONDITIONS.

NOTES:

1. PAINT MONOPINE BROWN TO MATCH TREE TRUNK
2. SURROUNDING TREE HEIGHTS WITHIN 200' OF THE PROJECT LOCATION AVERAGE APPROXIMATELY 155'
3. ALL EQUIPMENT AND MATERIALS VISIBLE TO THE PUBLIC (IF ANY), SHALL BE PAINTED IN NEUTRAL EARTH TONES TO MATCH SURROUNDING VEGETATION

GUALALA WIRELESS COLLOCATION

HIGHWAY 1
GUALALA, CA 95445

ISSUE STATUS

△	DATE	DESCRIPTION	BY
	06/12/19	ZD 100%	–
	08/01/19	CLIENT REV	–
	08/05/19	CLIENT REV	–
	–	–	–
	–	–	–
	–	–	–

DRAWN BY: J. SMITH

CHECKED BY: K. SORENSEN

APPROVED BY: –

DATE: 08/05/19

Streamline Engineering and Design, Inc.
8445 Sierra College Blvd, Suite E Granite Bay, CA 95746
Contact: Larry Houghtby Phone: 916-275-4180
E-Mail: larry@streamlineeng.com Fax: 916-660-1941

PRELIMINARY:
NOT FOR
CONSTRUCTION

KEVIN R. SORENSEN
S4469

TeleSpan COMMUNICATIONS

3888 STATE ST, STE# 204
SANTA BARBARA, CA 93105

SHEET TITLE:

ELEVATIONS

SHEET NUMBER:

A-8

CASE: U 2019-0017
OWNER: BRYSON, Craig & Kathleen
APN: 145-070-01
APLCT: Telespan Communications, LLC
AGENT: Telespan Communications, LLC
ADDRESS: 46440 Big Gulch Road, Gualala

Major Towns & Places
California Counties
Coastal Zone Boundary
Major Rivers
Highways
Major Roads

0 2,550 5,100 Feet
0 0.5 1 Miles
1:63,360

LOCATION MAP

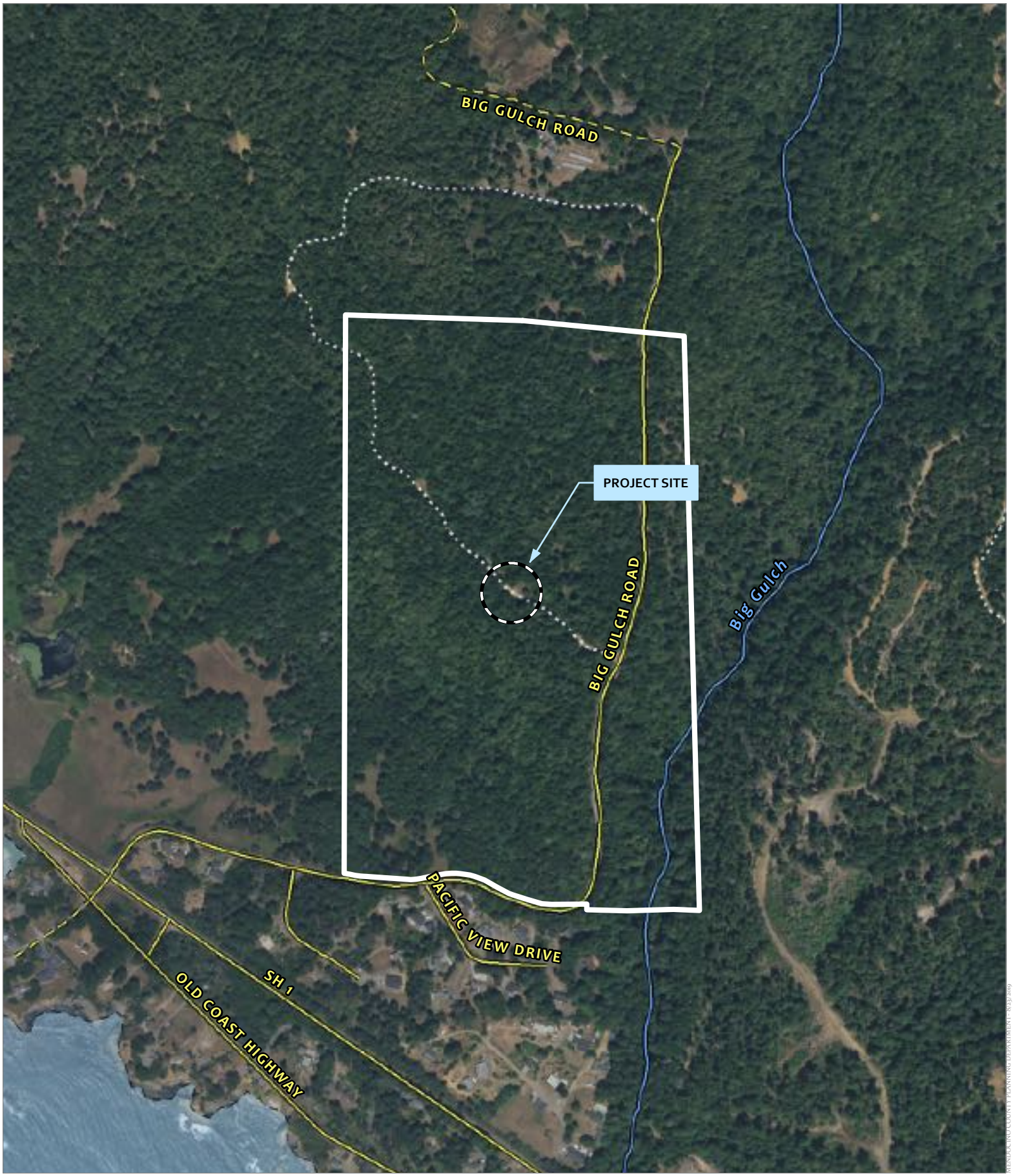

CASE: U 2019-0017
OWNER: BRYSON, Craig & Kathleen
APN: 145-070-01
APLCT: Telespan Communications, LLC
AGENT: Telespan Communications, LLC
ADDRESS: 46440 Big Gulch Road, Gualala

Named Rivers
Driveways/Unnamed Roads
Public Roads
Private Roads

0 250 500 Feet
0 0.0425 0.085 Miles
1:6,000

AERIAL IMAGERY

CASE: U 2019-0017
OWNER: BRYSON, Craig & Kathleen
APN: 145-070-01
APLCT: Telespan Communications, LLC
AGENT: Telespan Communications, LLC
ADDRESS: 46440 Big Gulch Road, Gualala

Named Rivers
Public Roads
Driveways/Unnamed Roads

0 150 300 Feet
0 0.025 0.05 Miles
1:3,600

AERIAL IMAGERY

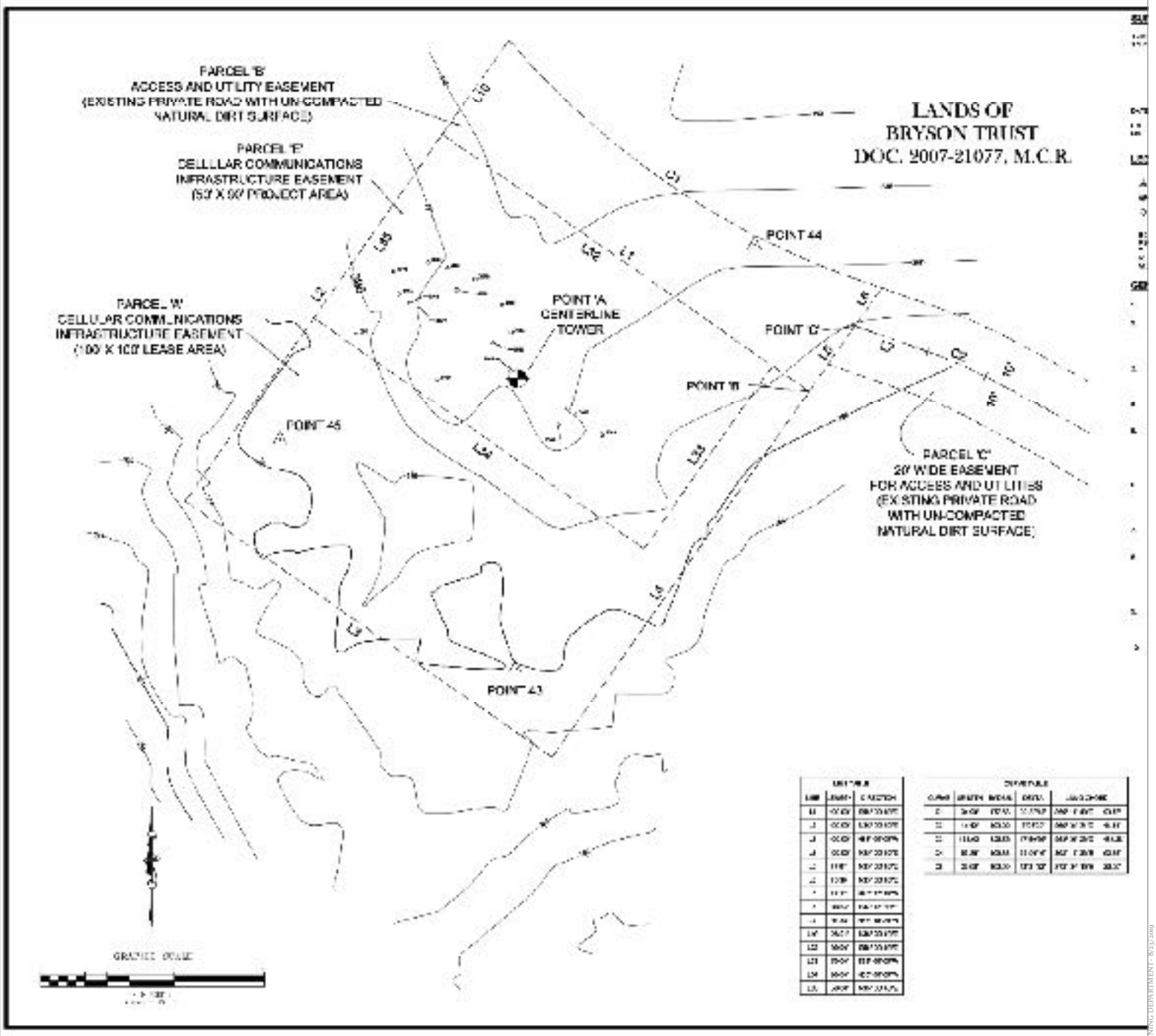

CASE: U 2019-0017
OWNER: BRYSON, Craig & Kathleen
APN: 145-070-01
APLCT: Telespan Communications, LLC
AGENT: Telespan Communications, LLC
ADDRESS: 46440 Big Gulch Road, Gualala

NO SCALE

SITE PLAN

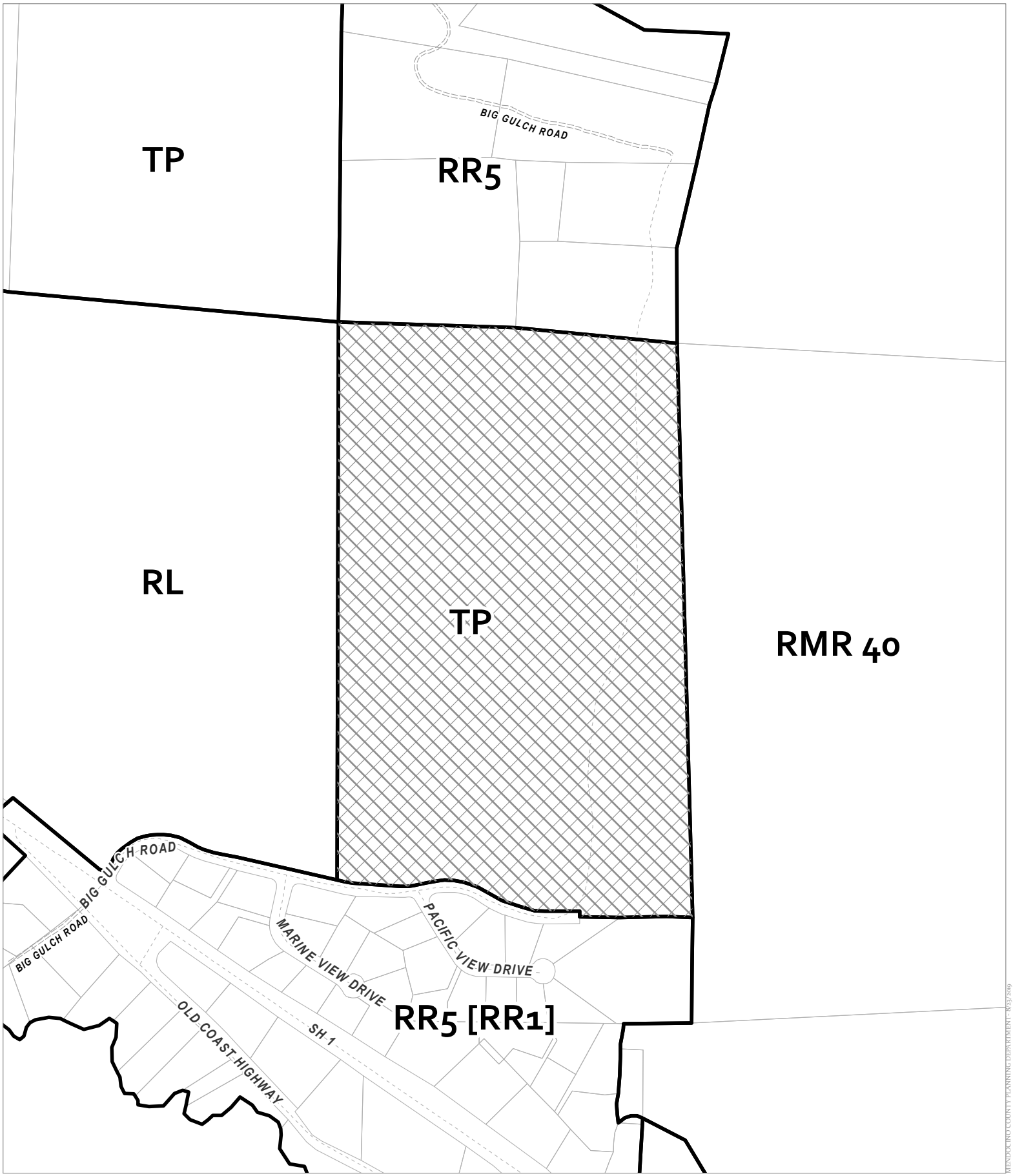

CASE: U 2019-0017
OWNER: BRYSON, Craig & Kathleen
APN: 145-070-01
APLCT: Telespan Communications, LLC
AGENT: Telespan Communications, LLC
ADDRESS: 46440 Big Gulch Road, Gualala

Zoning Districts

Public Roads

0 250 500 Feet

0 0.0425 0.085 Miles

N W E S

1:6,000

ZONING DISPLAY MAP

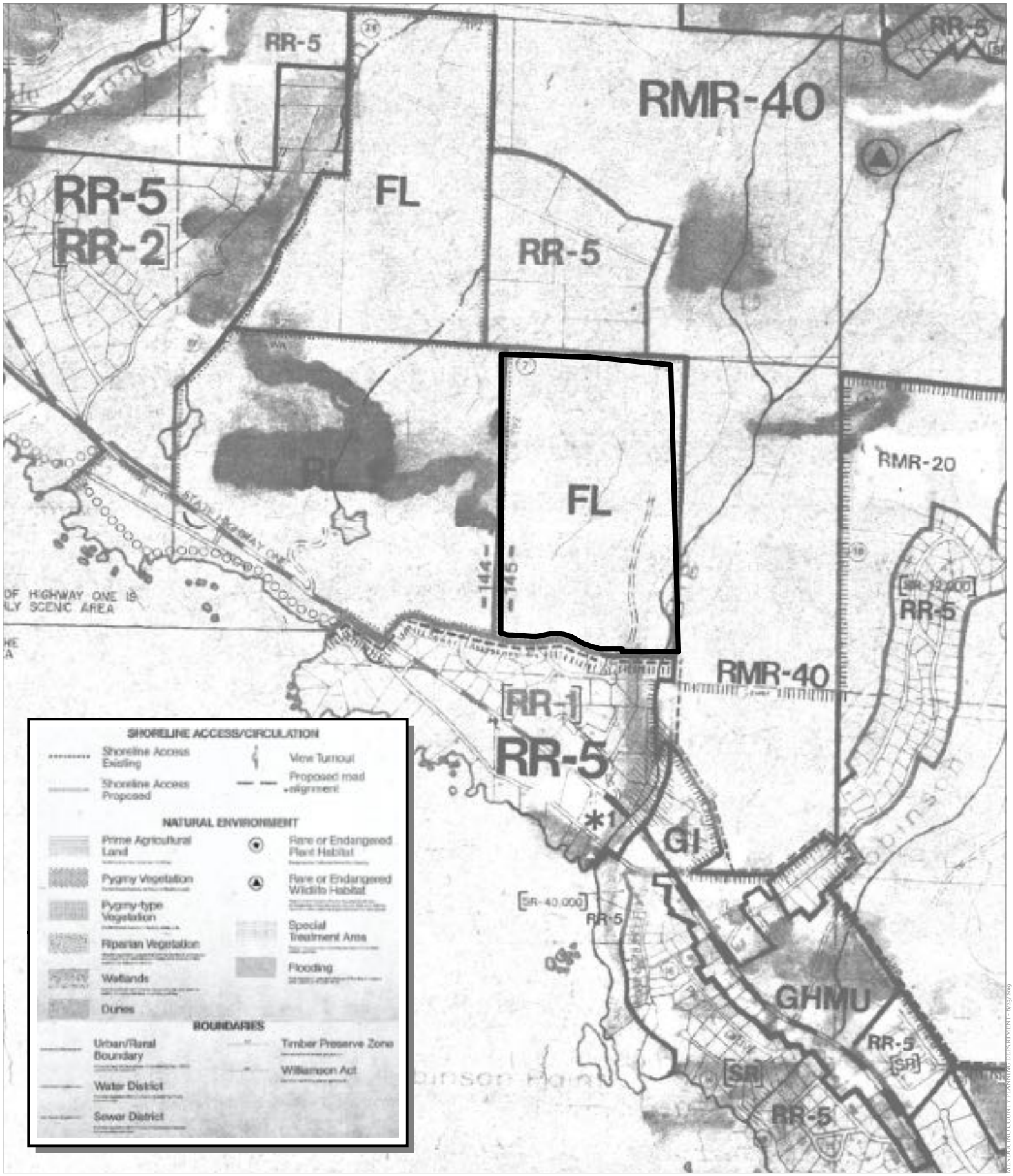

CASE: U 2019-0017
OWNER: BRYSON, Craig & Kathleen
APN: 145-070-01
APLCT: Telespan Communications, LLC
AGENT: Telespan Communications, LLC
ADDRESS: 46440 Big Gulch Road, Gualala

0 500 1,000 Feet
0 0.075 0.15 Miles
1:12,000

LCP LAND USE MAP 31: GUALALA

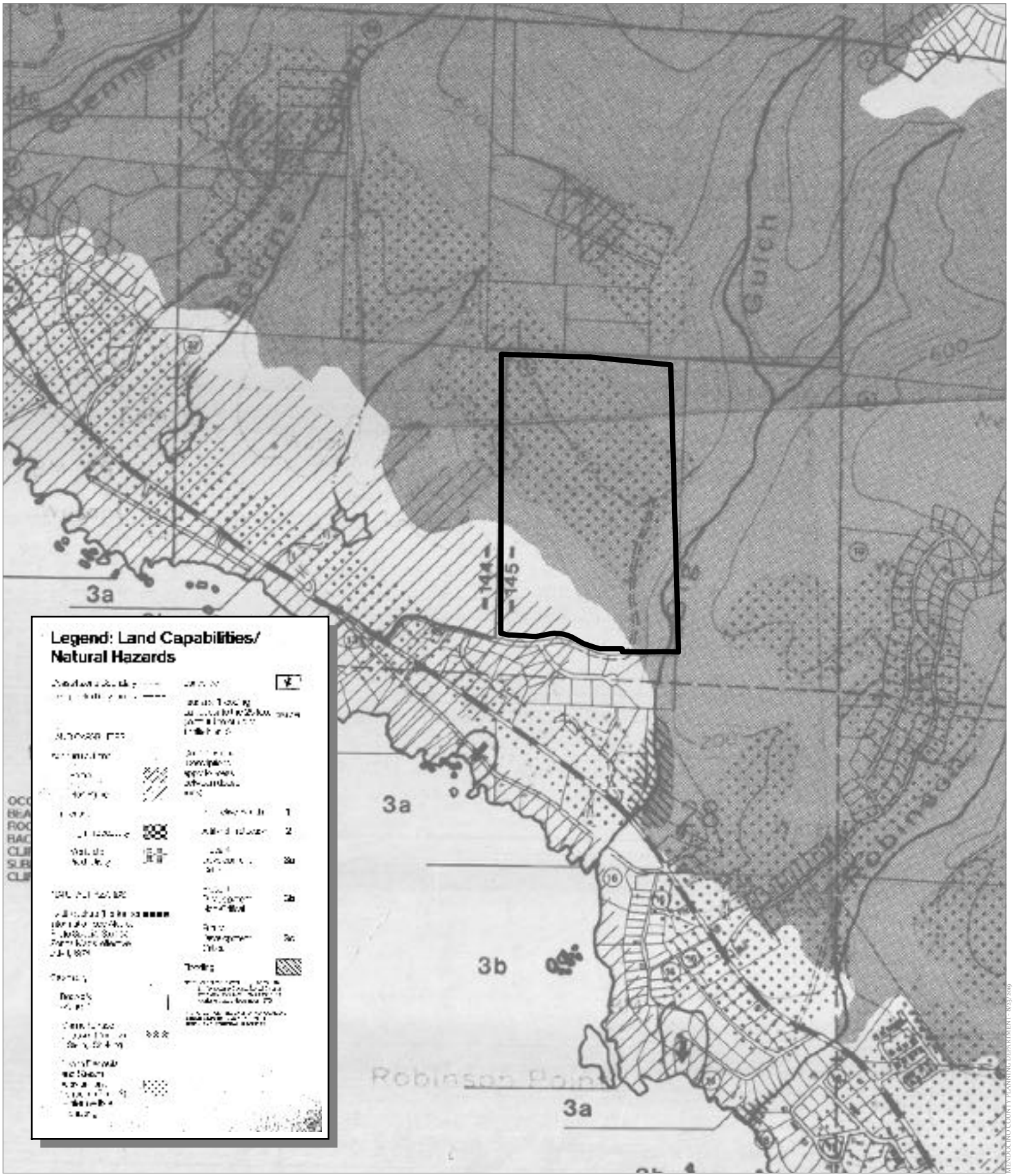

CASE: U 2019-0017
OWNER: BRYSON, Craig & Kathleen
APN: 145-070-01
APLCT: Telespan Communications, LLC
AGENT: Telespan Communications, LLC
ADDRESS: 46440 Big Gulch Road, Gualala

0 500 1,000 Feet
0 0.075 0.15 Miles
1:12,000

LCP LAND CAPABILITIES & NATURAL HAZARDS

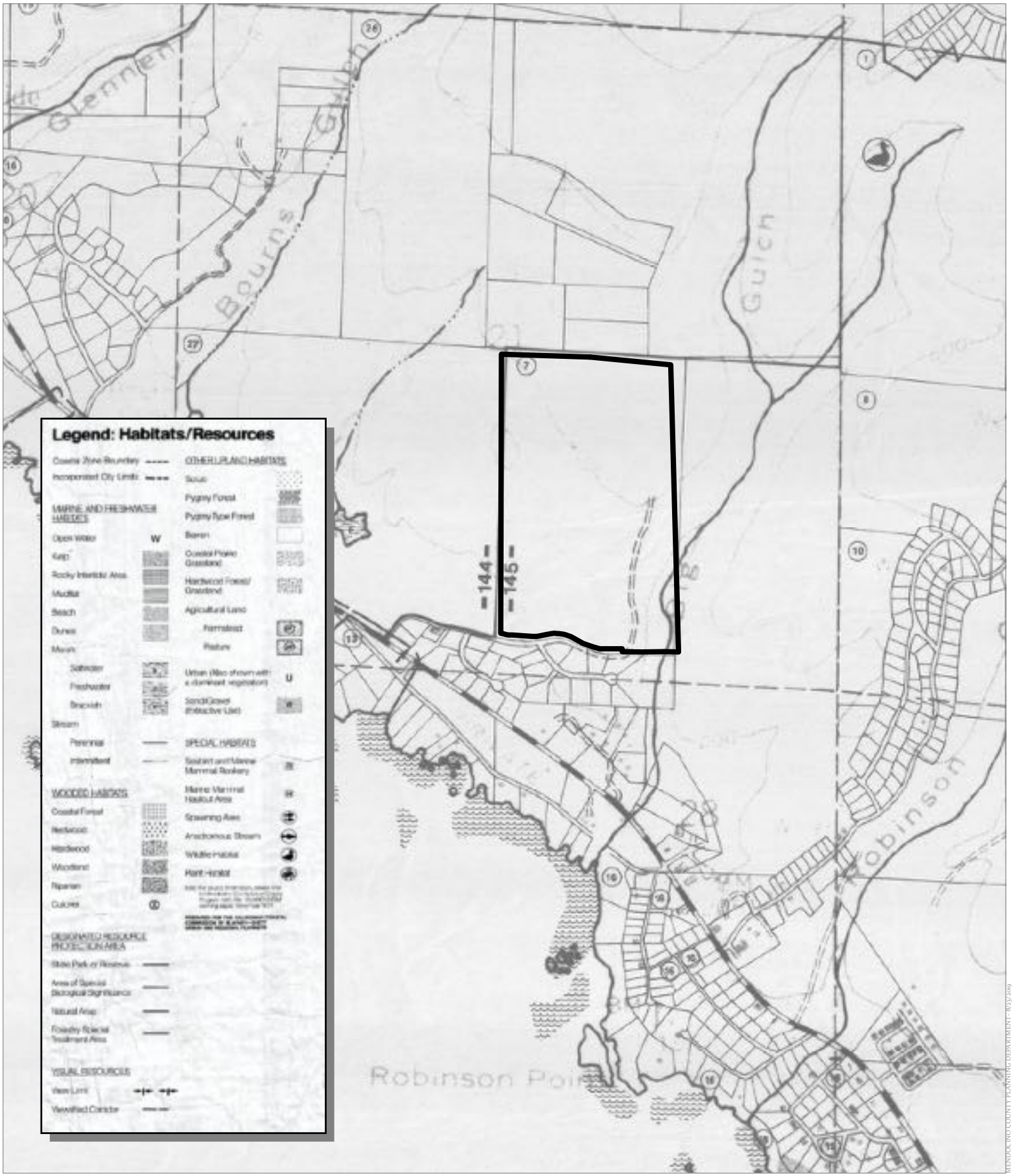

CASE: U 2019-0017
OWNER: BRYSON, Craig & Kathleen
APN: 145-070-01
APLCT: Telespan Communications, LLC
AGENT: Telespan Communications, LLC
ADDRESS: 46440 Big Gulch Road, Gualala

0 500 1,000 Feet
0 0.075 0.15 Miles
1:12,000

LCP HABITATS & RESOURCES

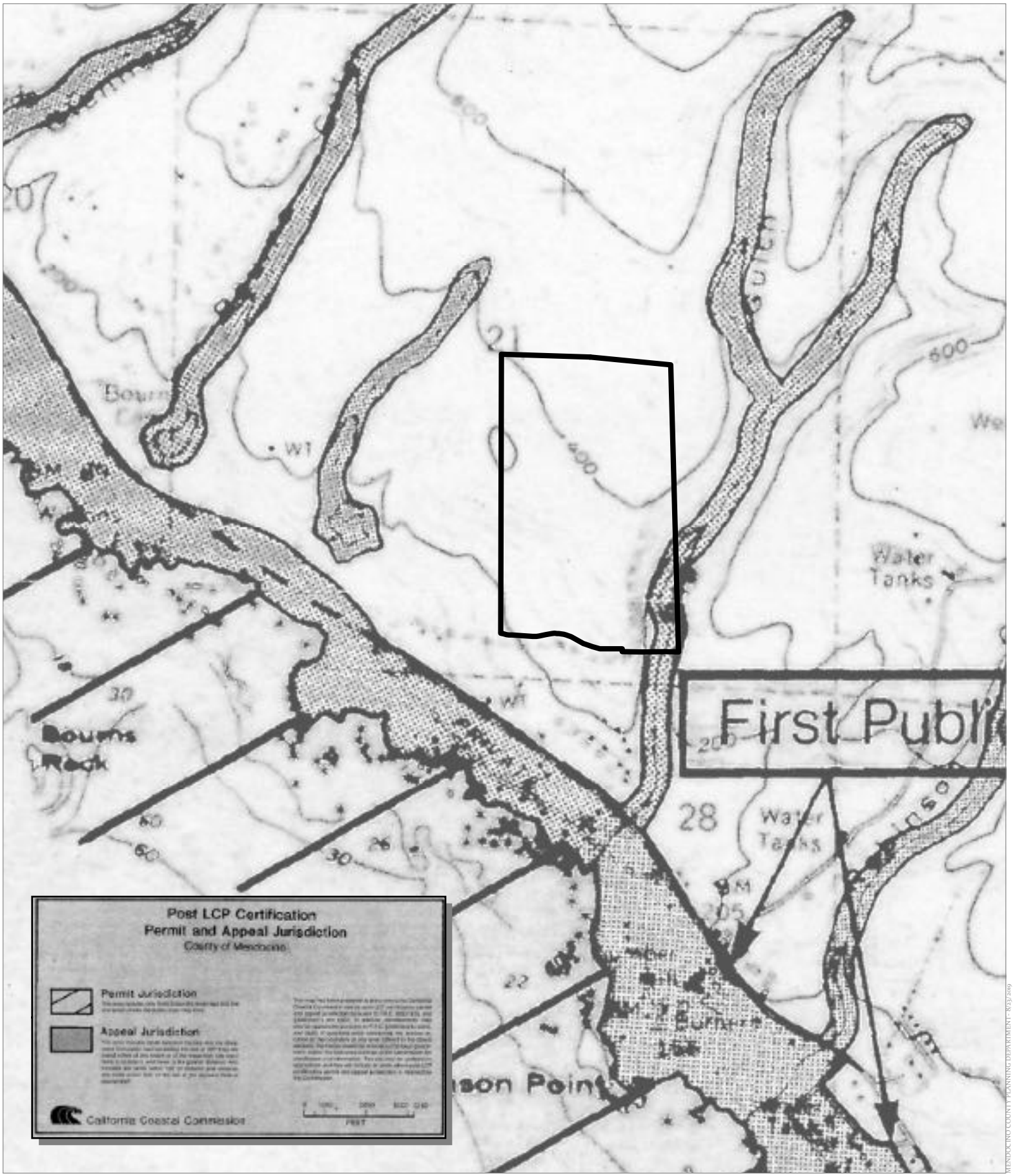

CASE: U 2019-0017
OWNER: BRYSON, Craig & Kathleen
APN: 145-070-01
APLCT: Telespan Communications, LLC
AGENT: Telespan Communications, LLC
ADDRESS: 46440 Big Gulch Road, Gualala

0 500 1,000 Feet
0 0.075 0.15 Miles
1:12,000

POST LCP CERTIFICATION & APPEAL JURISDICTION

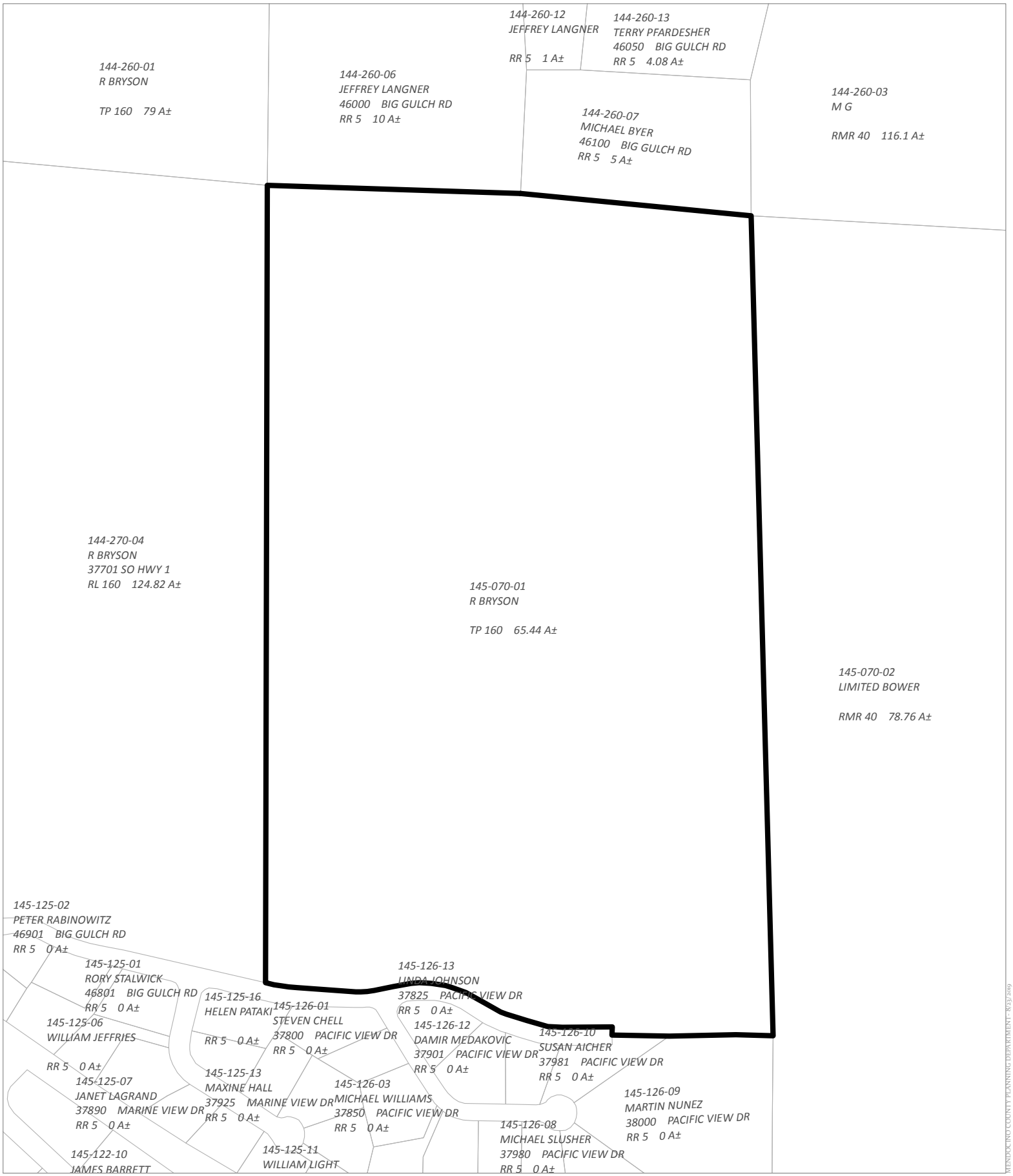

CASE: U 2019-0017
OWNER: BRYSON, Craig & Kathleen
APN: 145-070-01
APLCT: Telespan Communications, LLC
AGENT: Telespan Communications, LLC
ADDRESS: 46440 Big Gulch Road, Gualala

0 175 350 Feet
0 0.03 0.06 Miles
1:4,200

ADJACENT PARCELS

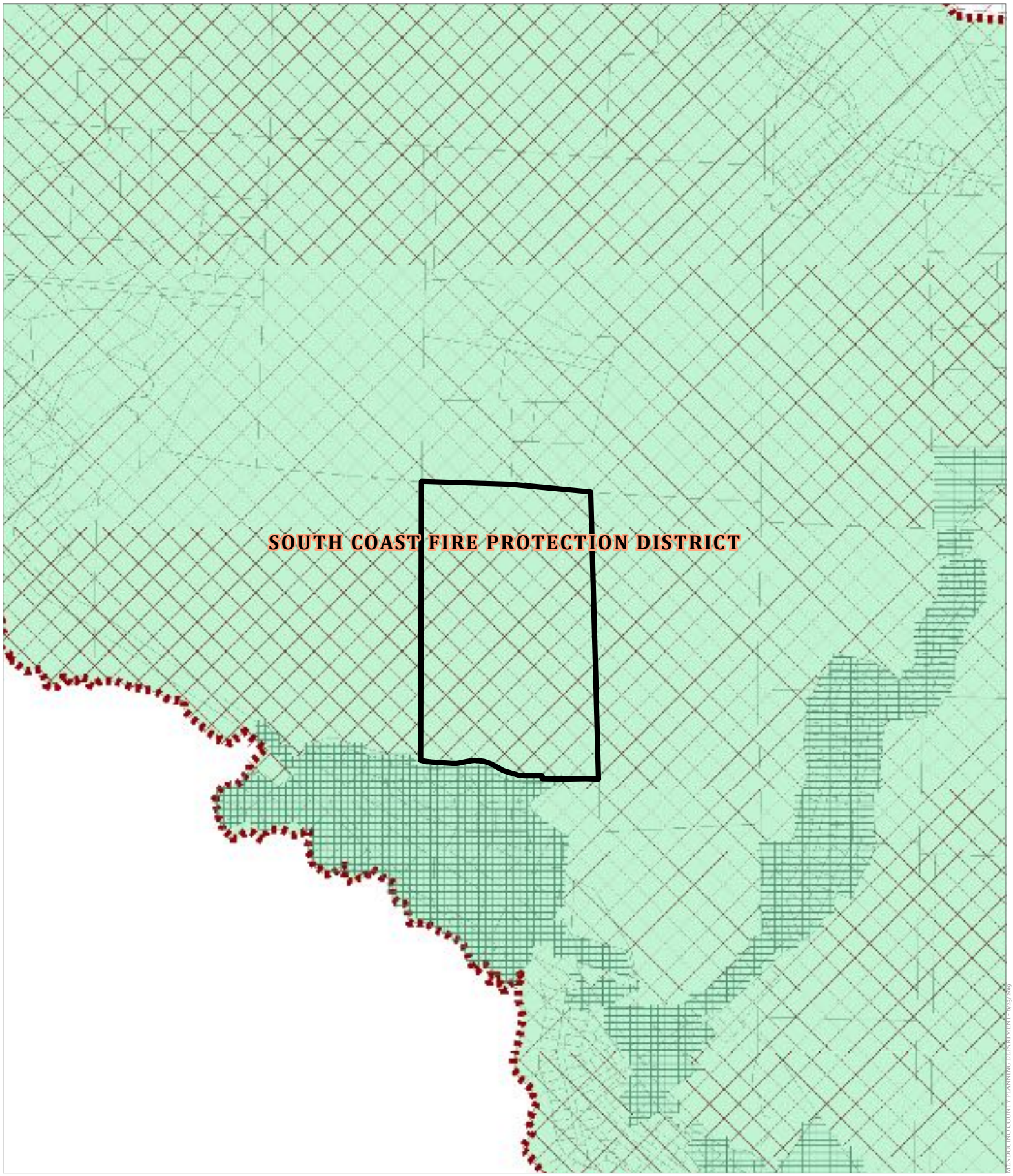

CASE: U 2019-0017
OWNER: BRYSON, Craig & Kathleen
APN: 145-070-01
APLCT: Telespan Communications, LLC
AGENT: Telespan Communications, LLC
ADDRESS: 46440 Big Gulch Road, Gualala

High Fire Hazard

Moderate Fire Hazard

County Fire Districts

0 500 1,000 Feet

0 0.075 0.15 Miles

N W E S

1:12,000

FIRE HAZARD ZONES & RESPONSIBILITY AREAS

STATE RESPONSIBILITY AREA

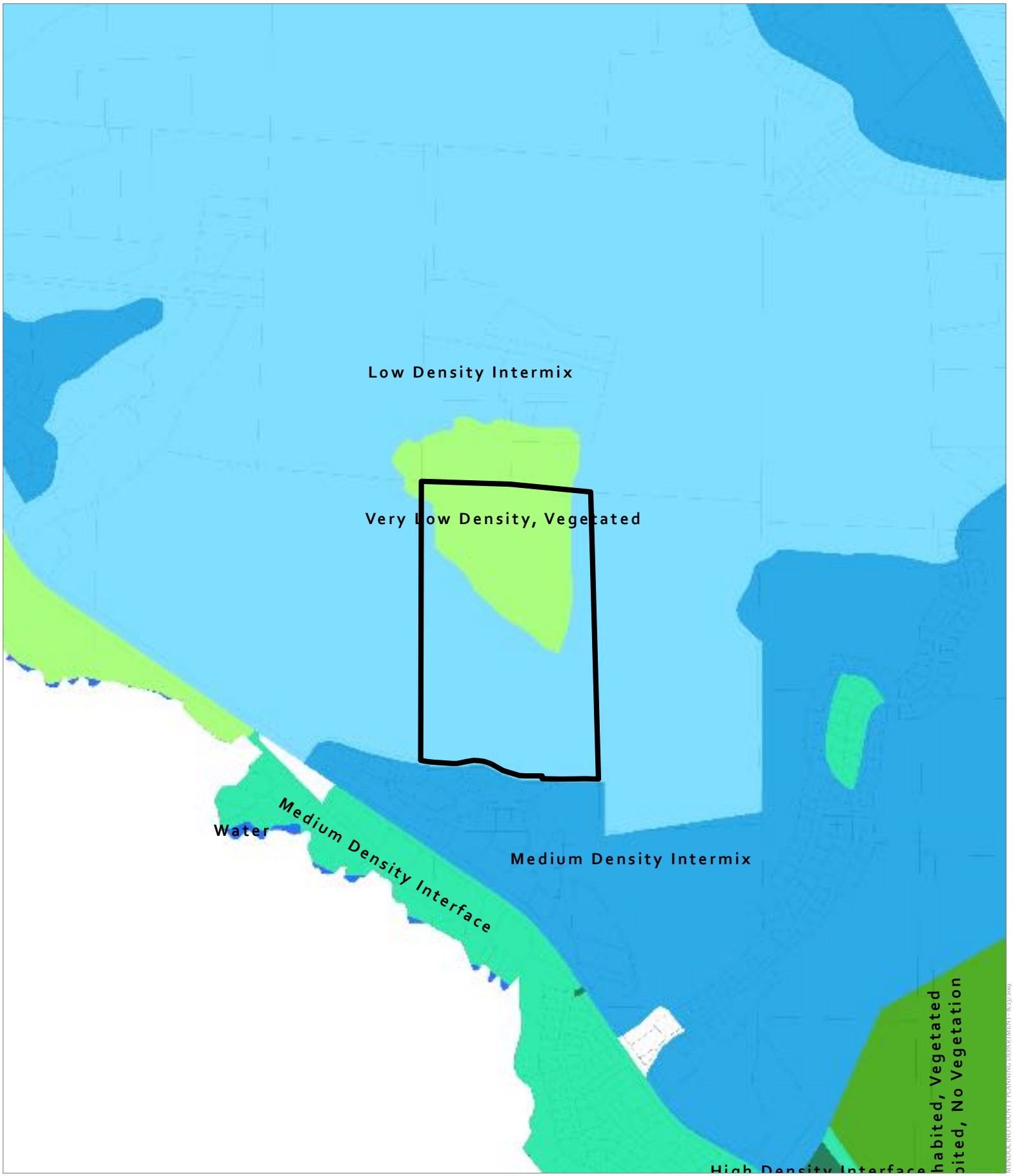

CASE: U 2019-0017
OWNER: BRYSON, Craig & Kathleen
APN: 145-070-01
APLCT: Telespan Communications, LLC
AGENT: Telespan Communications, LLC
ADDRESS: 46440 Big Gulch Road, Gualala

0 500 1,000 Feet
0 0.075 0.15 Miles
1:12,000

Water

WILDLAND-URBAN INTERFACE ZONES

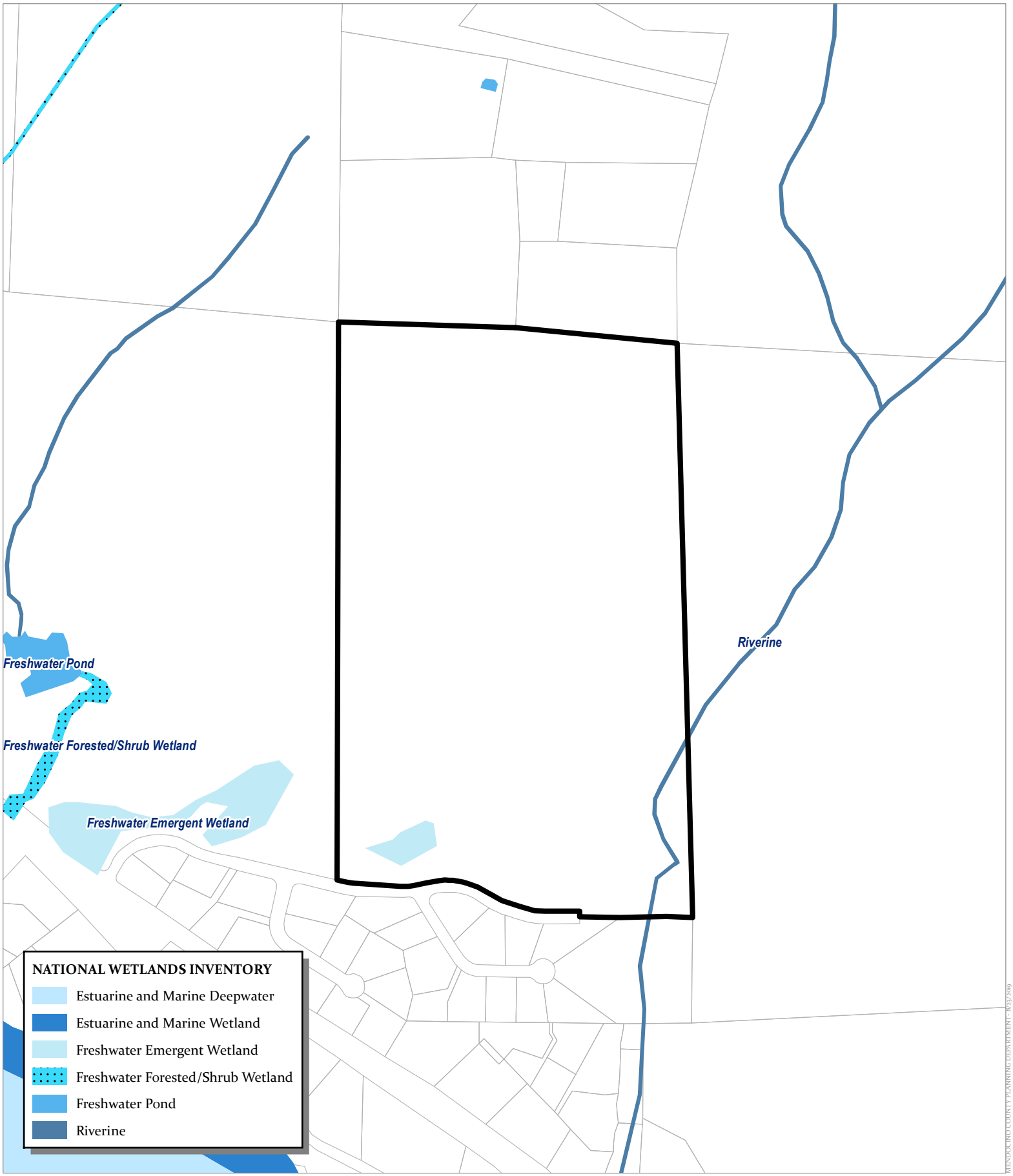

CASE: U 2019-0017
OWNER: BRYSON, Craig & Kathleen
APN: 145-070-01
APLCT: Telespan Communications, LLC
AGENT: Telespan Communications, LLC
ADDRESS: 46440 Big Gulch Road, Gualala

0 250 500 Feet
0 0.0425 0.085 Miles
1:6,000

WETLANDS

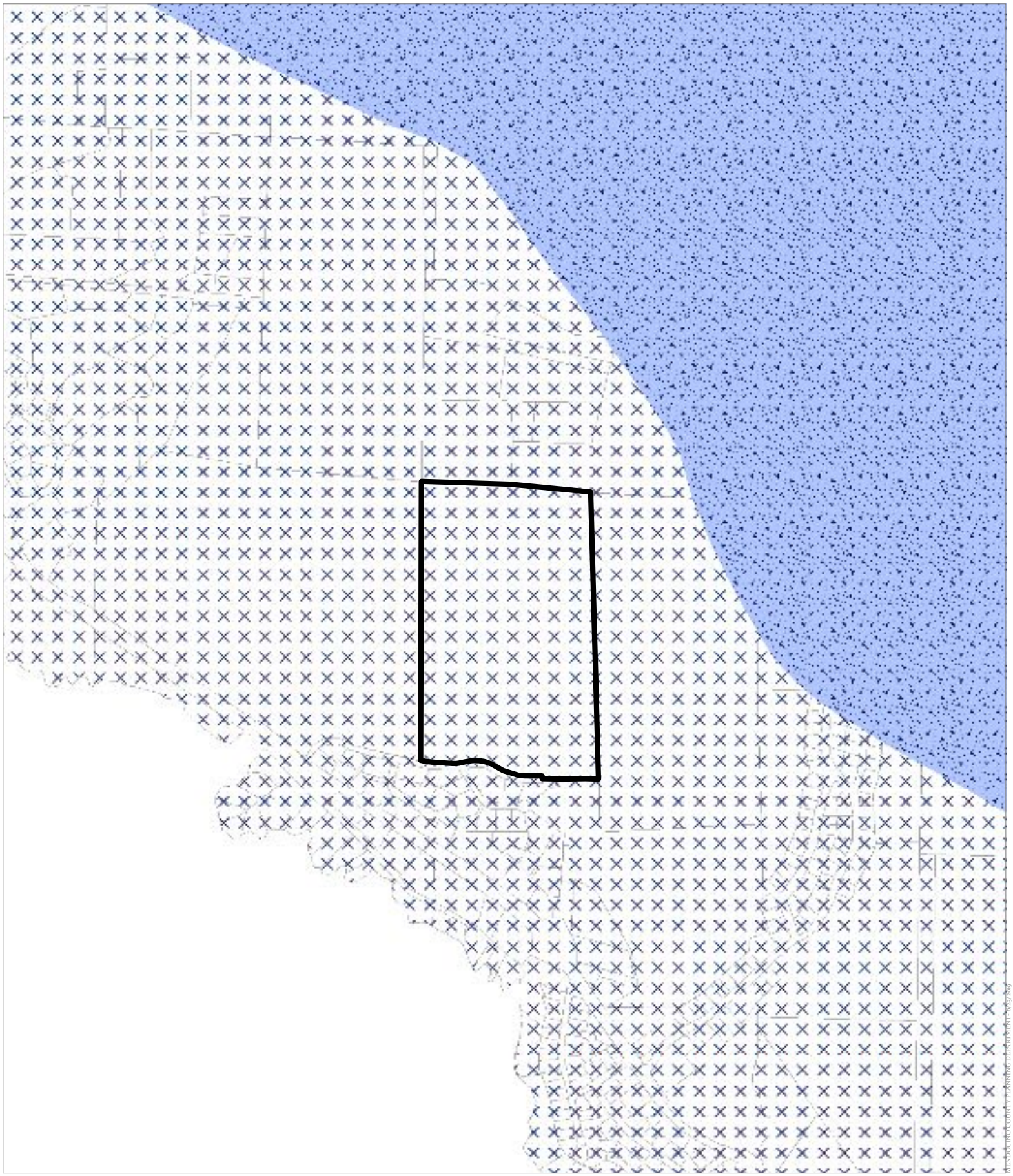

CASE: U 2019-0017
OWNER: BRYSON, Craig & Kathleen
APN: 145-070-01
APLCT: Telespan Communications, LLC
AGENT: Telespan Communications, LLC
ADDRESS: 46440 Big Gulch Road, Gualala

Critical Water Areas

Critical Water Resources Bedrock

0 500 1,000 Feet

0 0.075 0.15 Miles

N W E S

1:12,000

GROUND WATER RESOURCES

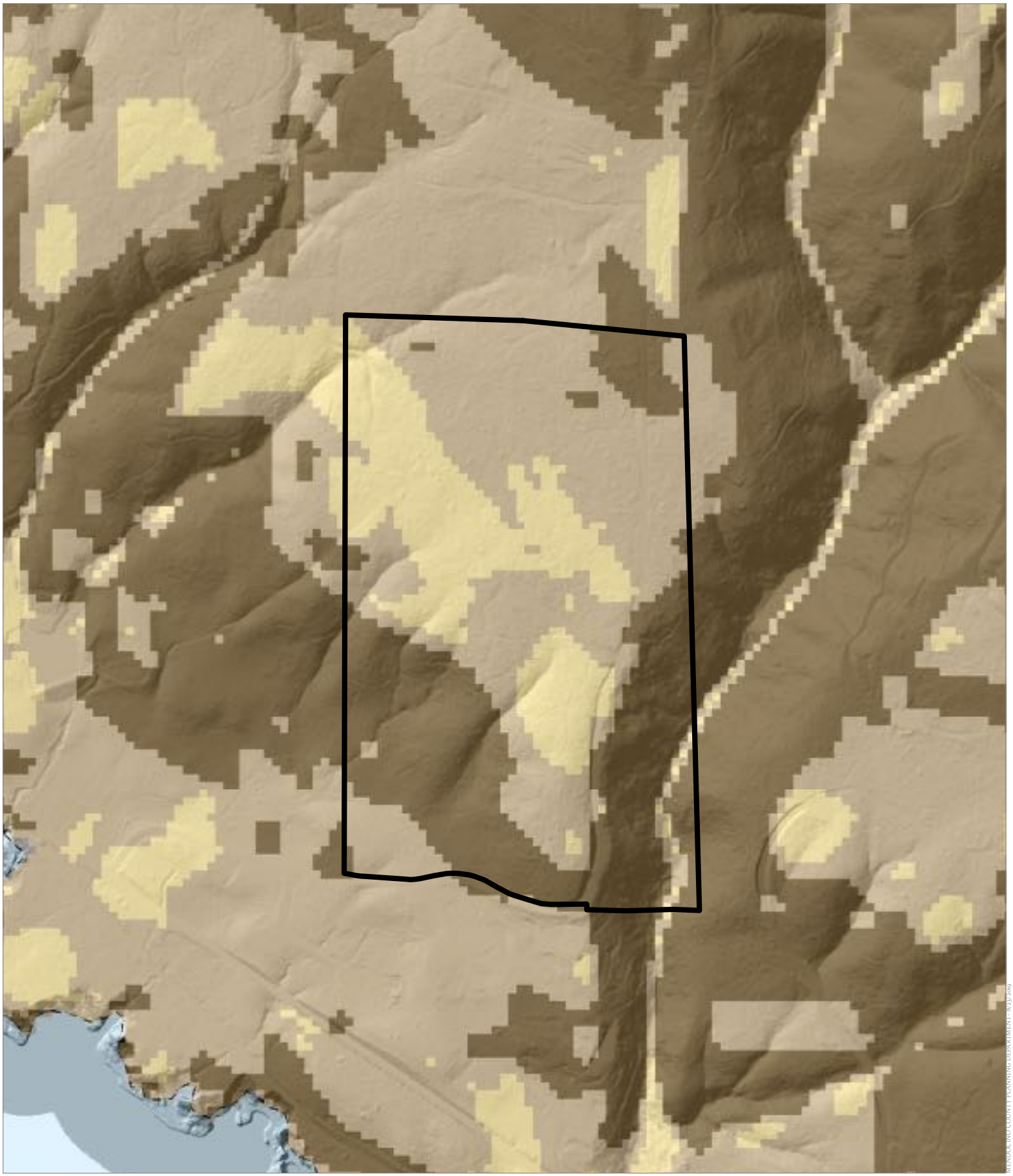

CASE: U 2019-0017
OWNER: BRYSON, Craig & Kathleen
APN: 145-070-01
APLCT: Telespan Communications, LLC
AGENT: Telespan Communications, LLC
ADDRESS: 46440 Big Gulch Road, Gualala

0° - 14°
15° - 32°
33° - 72°

0 250 500 Feet
0 0.0425 0.085 Miles
1:6,000

ESTIMATED SLOPE

MENDOCINO COUNTY PLANNING DEPARTMENT - 02/27/2019

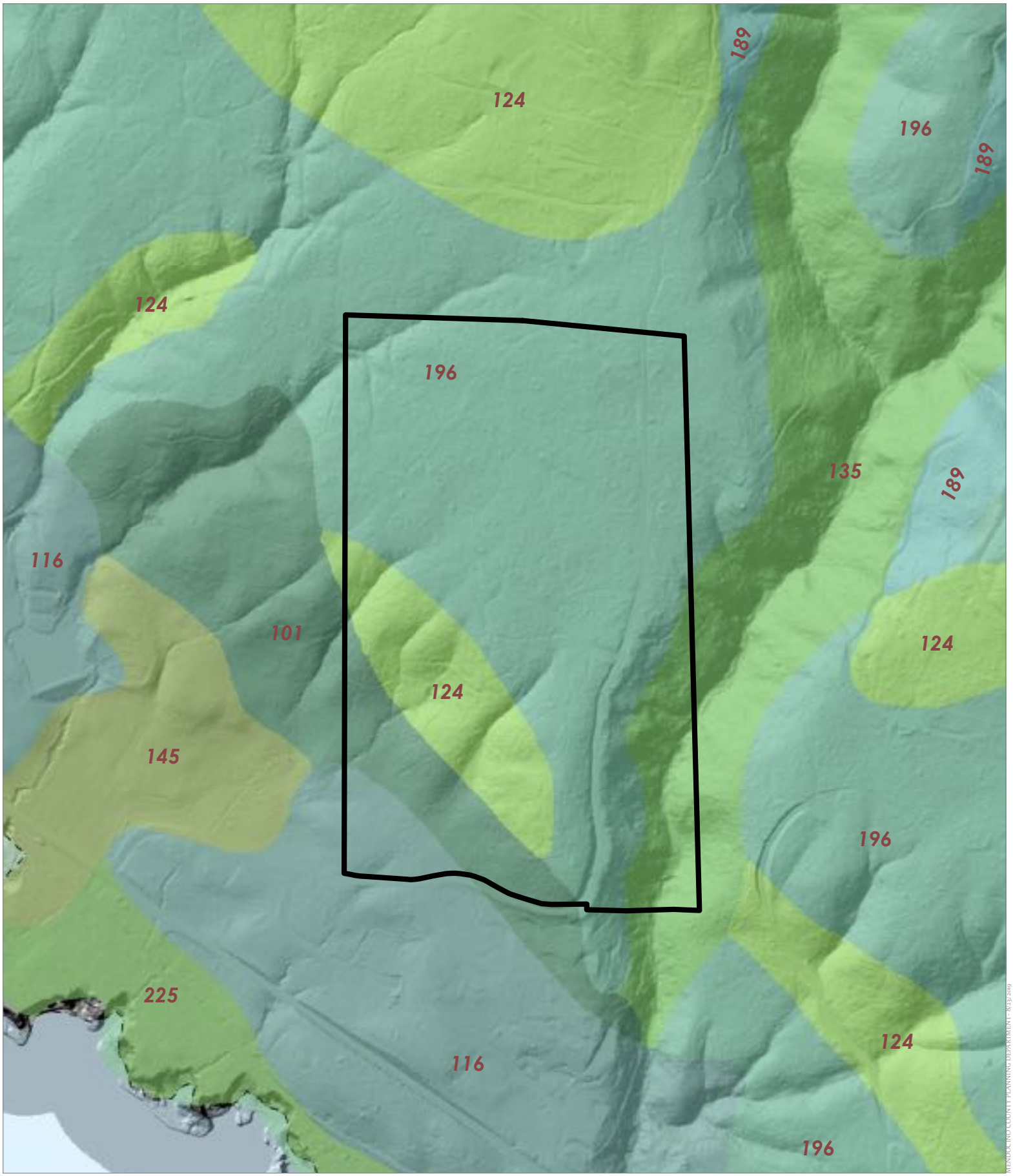

CASE: U 2019-0017
OWNER: BRYSON, Craig & Kathleen
APN: 145-070-01
APLCT: Telespan Communications, LLC
AGENT: Telespan Communications, LLC
ADDRESS: 46440 Big Gulch Road, Gualala

0 250 500 Feet
0 0.0425 0.085 Miles
1:6,000

WESTERN SOIL CLASSIFICATIONS

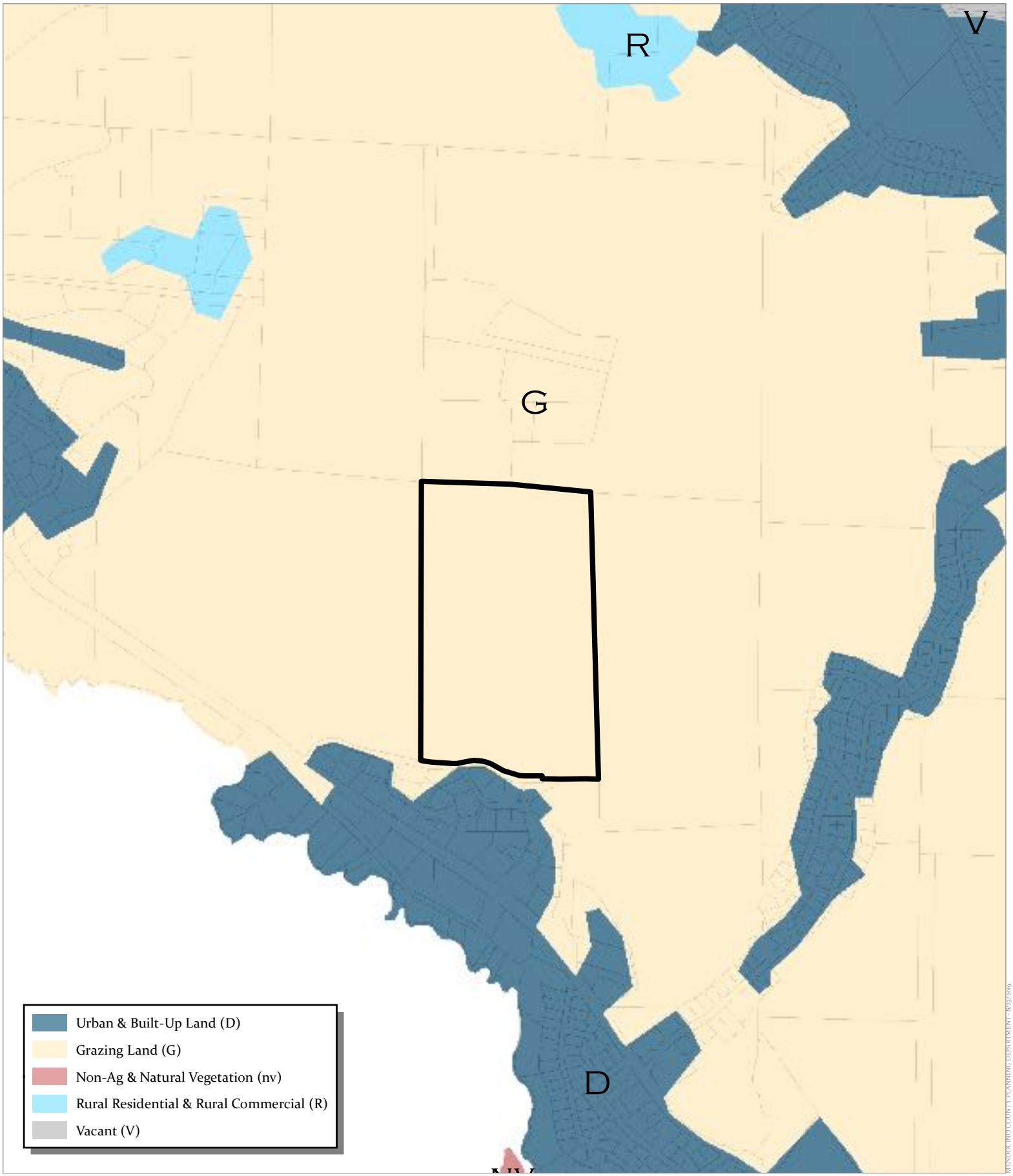

CASE: U 2019-0017
OWNER: BRYSON, Craig & Kathleen
APN: 145-070-01
APLCT: Telespan Communications, LLC
AGENT: Telespan Communications, LLC
ADDRESS: 46440 Big Gulch Road, Gualala

0 500 1,000 Feet
0 0.075 0.15 Miles
1:12,000

FARMLAND CLASSIFICATIONS

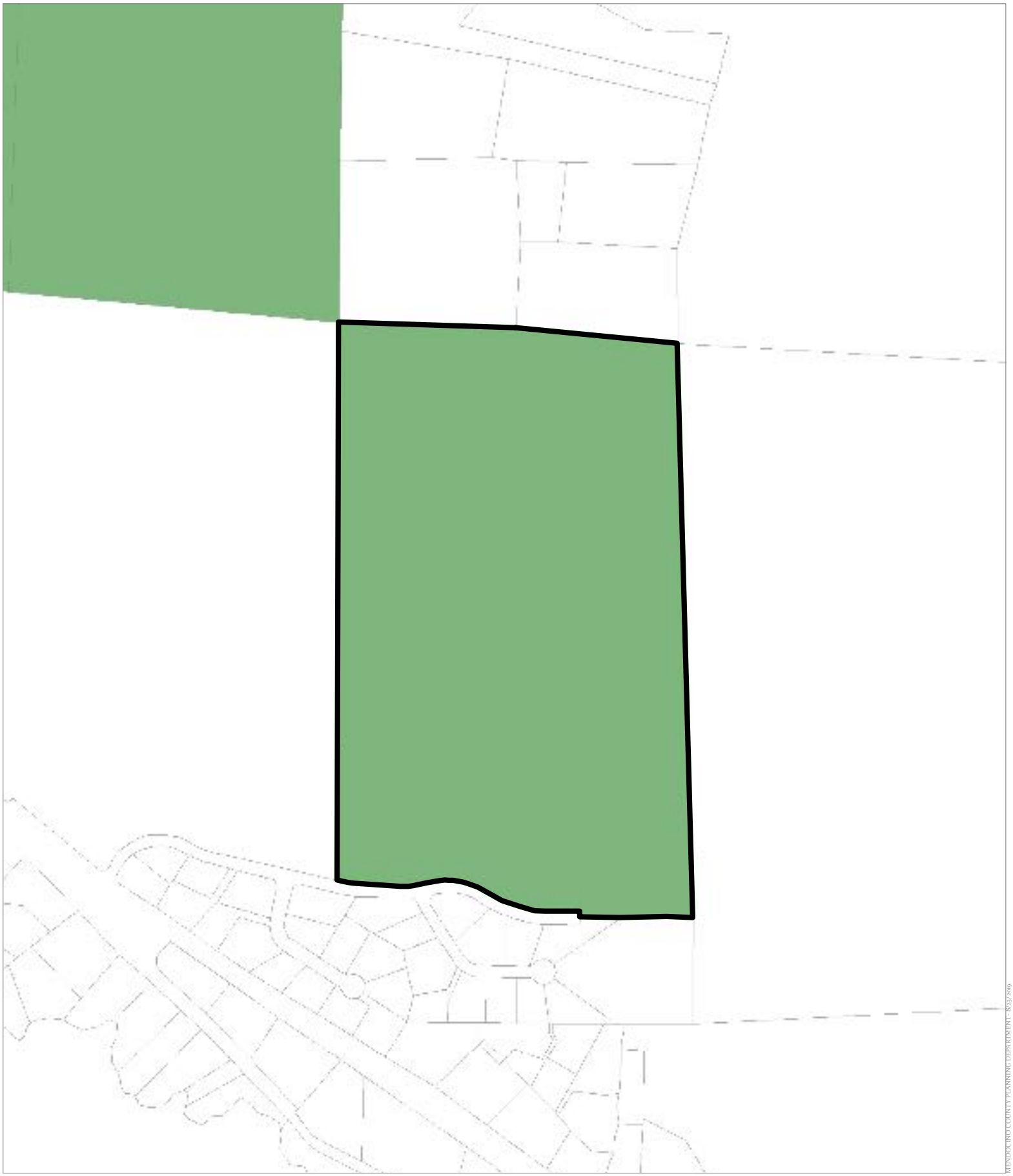

CASE: U 2019-0017
OWNER: BRYSON, Craig & Kathleen
APN: 145-070-01
APLCT: Telespan Communications, LLC
AGENT: Telespan Communications, LLC
ADDRESS: 46440 Big Gulch Road, Gualala

0 250 500 Feet
0 0.0425 0.085 Miles
1:6,000

TPZ 2018

TIMBER PRODUCTION ZONES

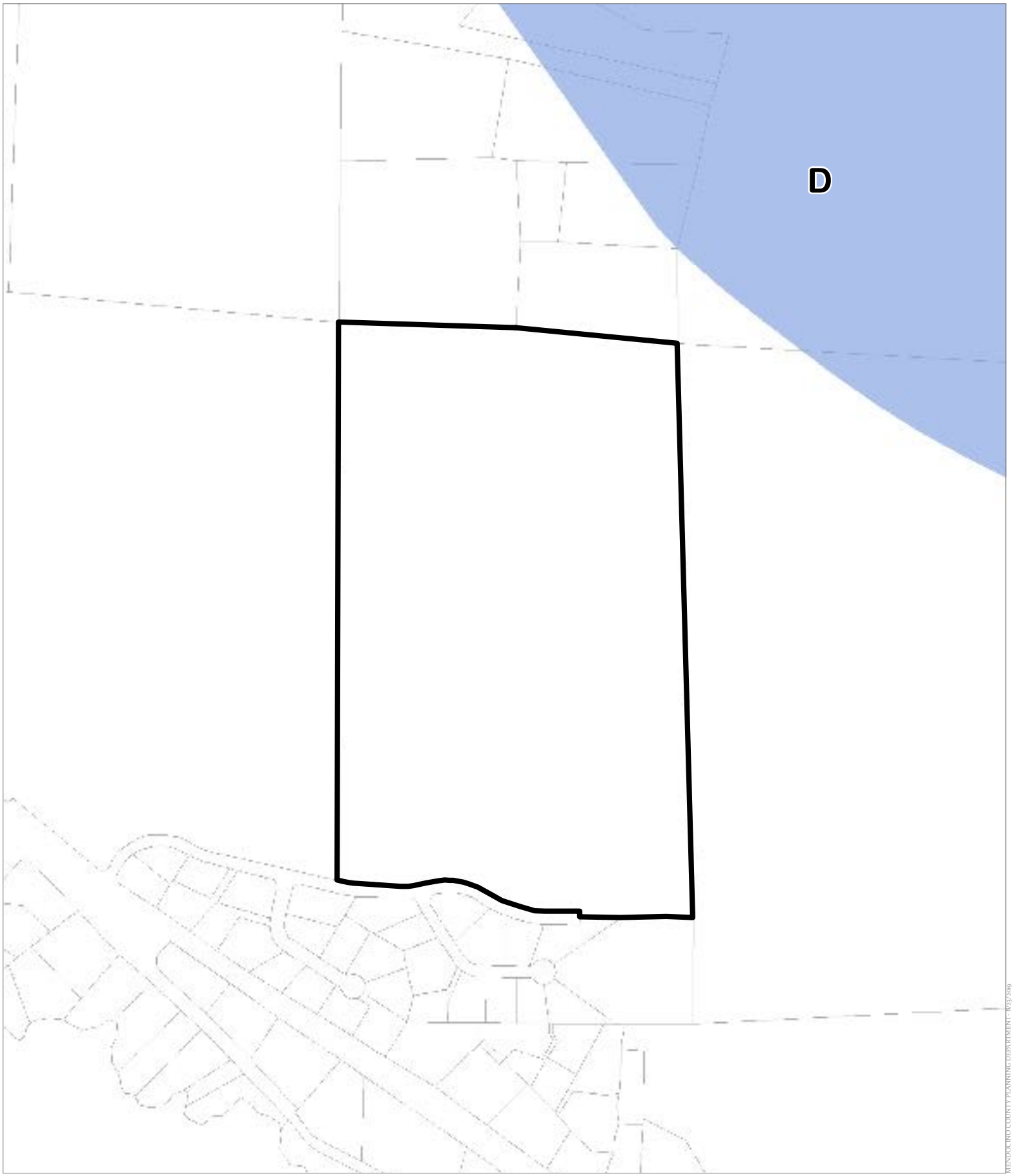

CASE: U 2019-0017
OWNER: BRYSON, Craig & Kathleen
APN: 145-070-01
APLCT: Telespan Communications, LLC
AGENT: Telespan Communications, LLC
ADDRESS: 46440 Big Gulch Road, Gualala

0 250 500 Feet
0 0.0425 0.085 Miles
1:6,000

AIRPORT ZONES

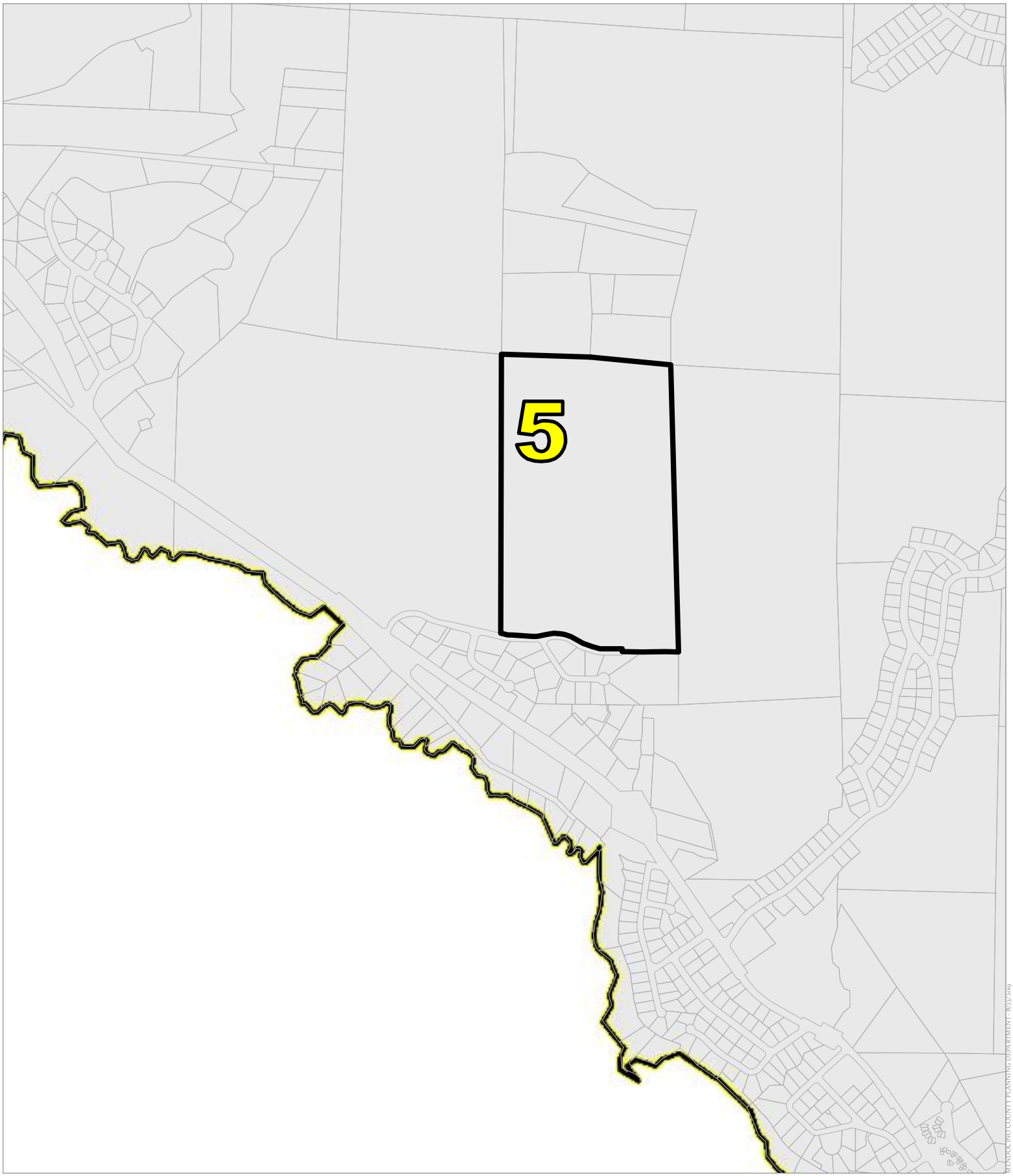

CASE: U 2019-0017
OWNER: BRYSON, Craig & Kathleen
APN: 145-070-01
APLCT: Telespan Communications, LLC
AGENT: Telespan Communications, LLC
ADDRESS: 46440 Big Gulch Road, Gualala

Supervisorial Districts 2010

Gualala MAC

0 500 1,000 Feet

0 0.075 0.15 Miles

N W E S

1:12,000

MISC DISTRICTS

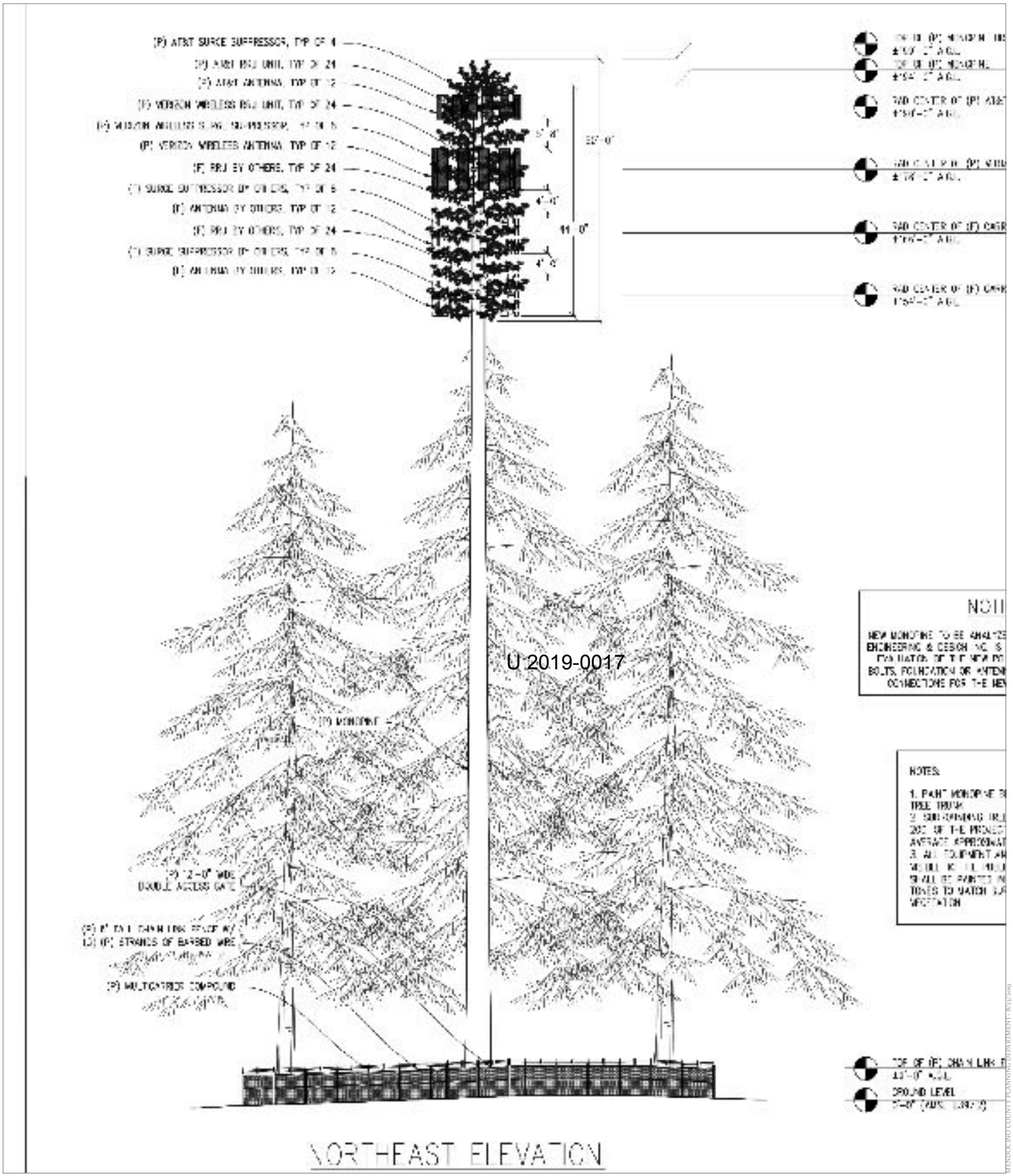

CASE: U 2019-0017
OWNER: BRYSON, Craig & Kathleen
APN: 145-070-01
APLCT: Telespan Communications, LLC
AGENT: Telespan Communications, LLC
ADDRESS: 46440 Big Gulch Road, Gualala

NO SCALE

ELEVATIONS

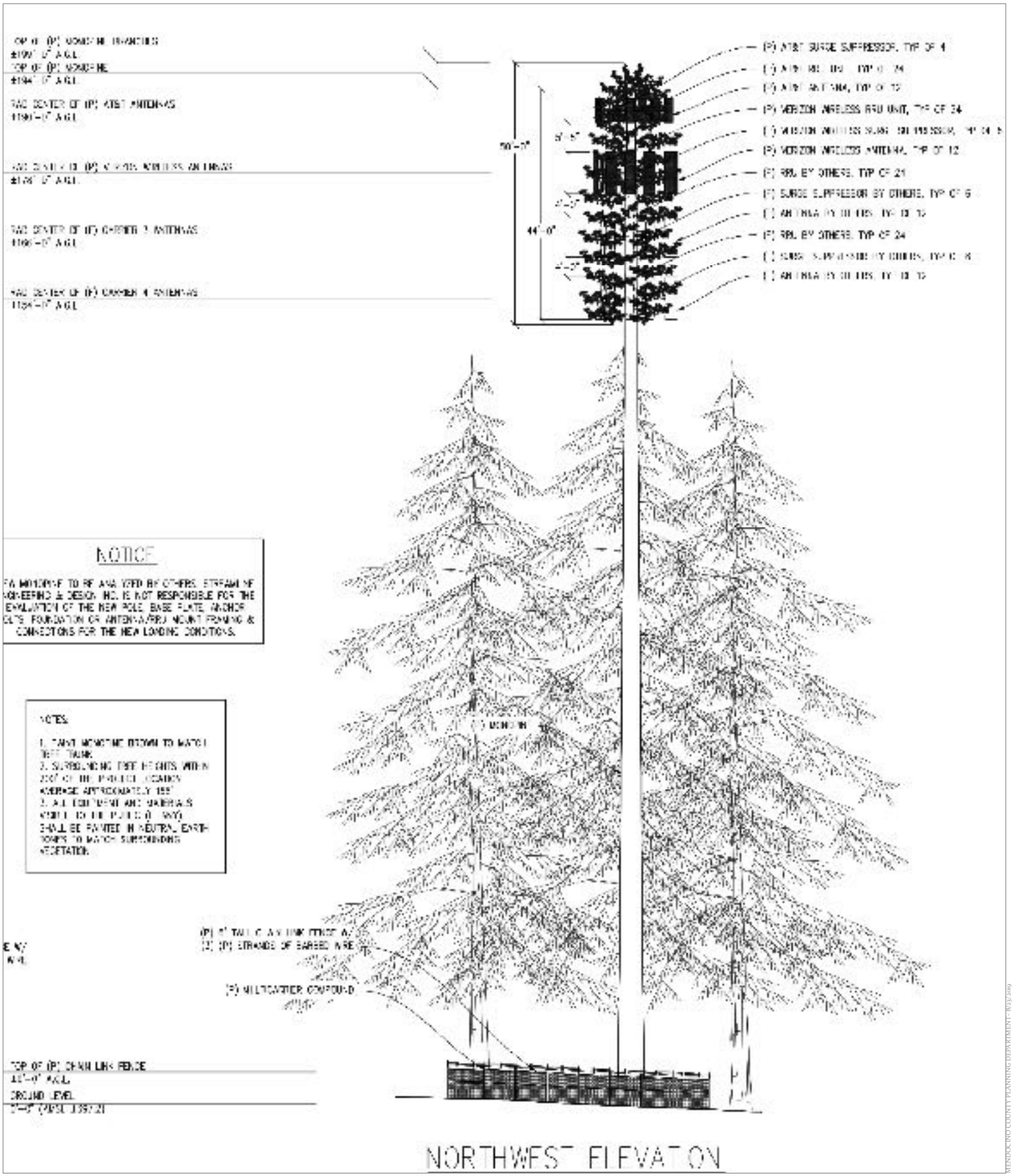

CASE: U 2019-0017
OWNER: BRYSON, Craig & Kathleen
APN: 145-070-01
APLCT: Telespan Communications, LLC
AGENT: Telespan Communications, LLC
ADDRESS: 46440 Big Gulch Road, Gualala

NO SCALE

ELEVATIONS

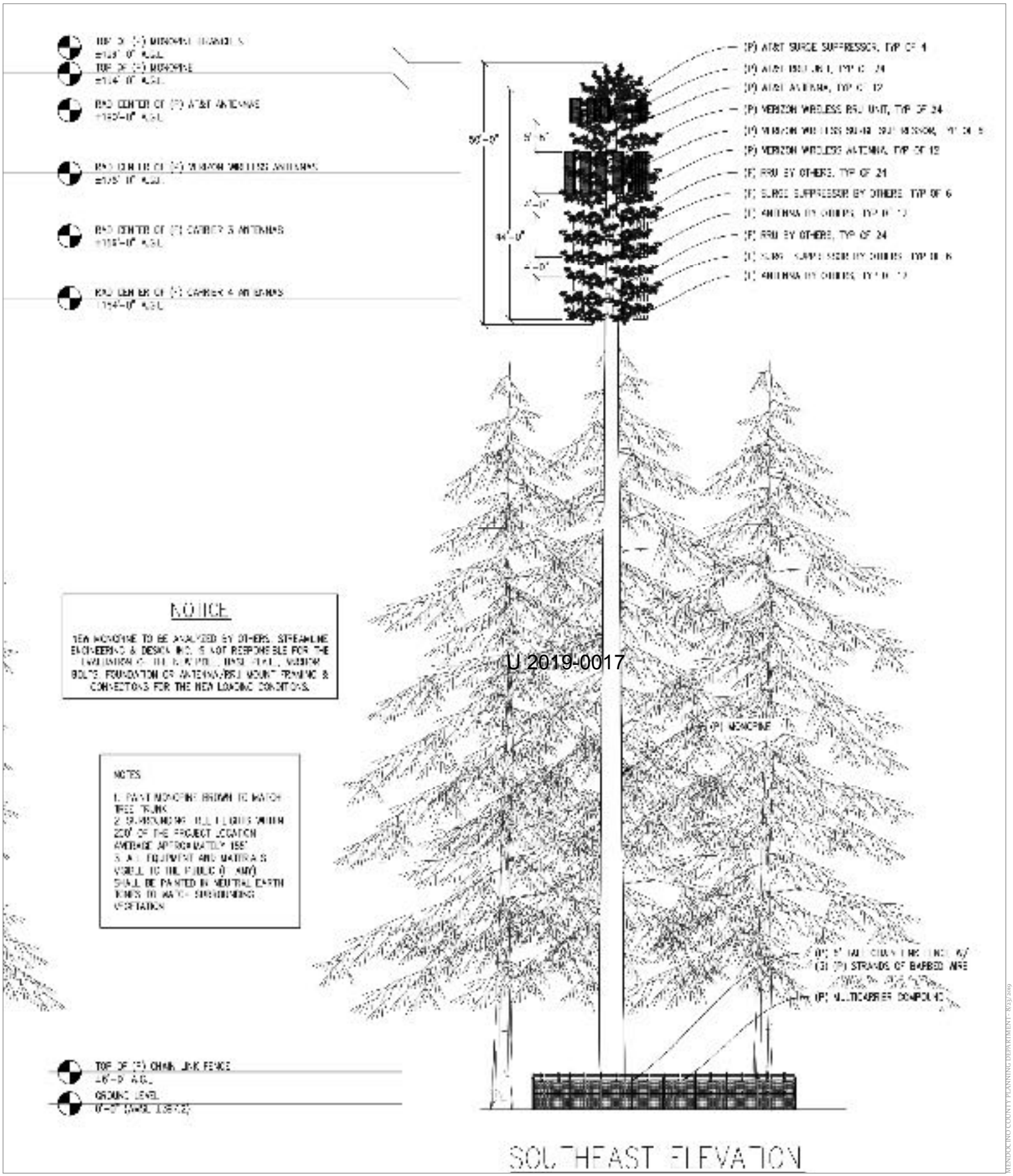

CASE: U 2019-0017
OWNER: BRYSON, Craig & Kathleen
APN: 145-070-01
APLCT: Telespan Communications, LLC
AGENT: Telespan Communications, LLC
ADDRESS: 46440 Big Gulch Road, Gualala

NO SCALE

ELEVATIONS

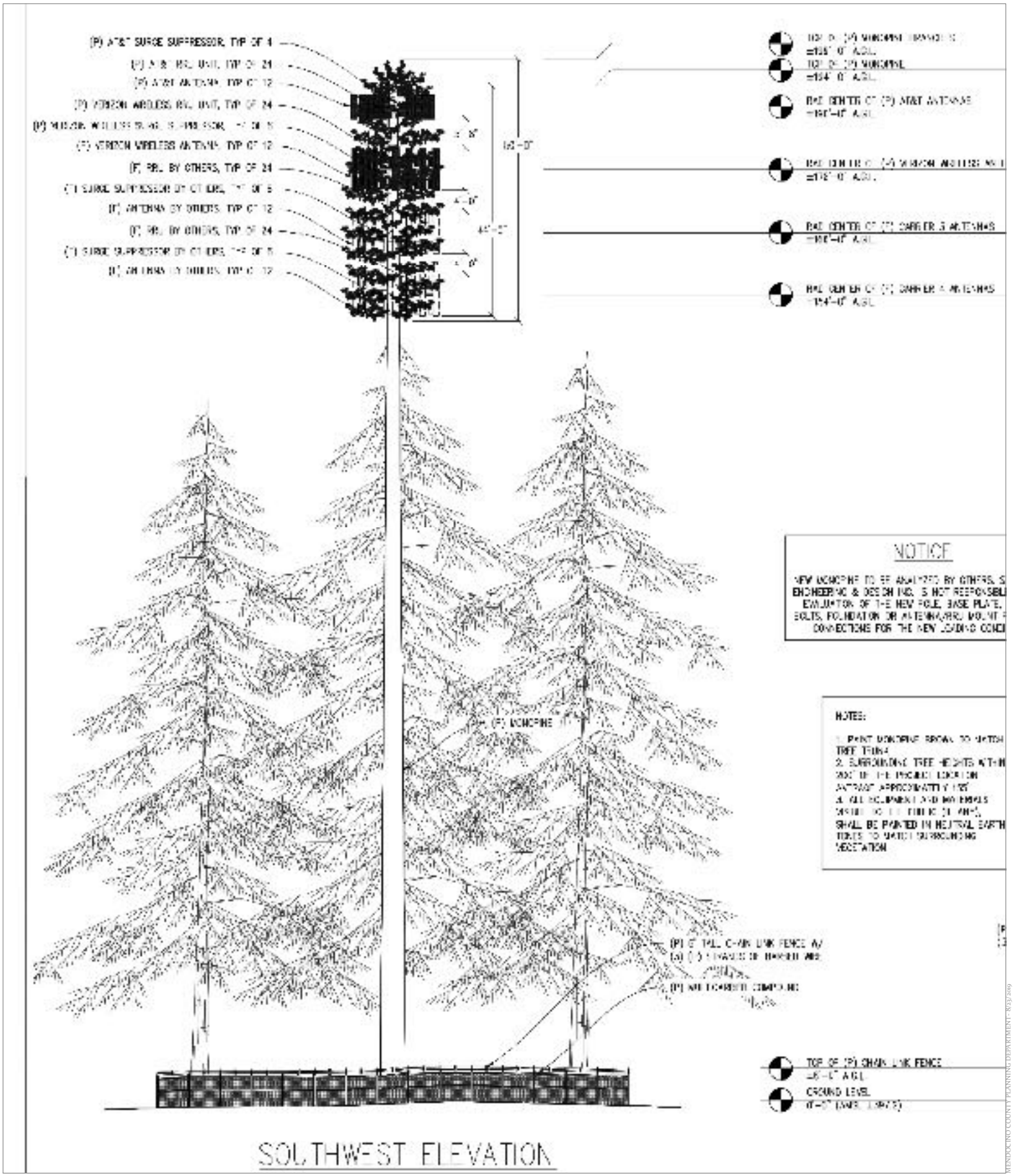

CASE: U 2019-0017
OWNER: BRYSON, Craig & Kathleen
APN: 145-070-01
APLCT: Telespan Communications, LLC
AGENT: Telespan Communications, LLC
ADDRESS: 46440 Big Gulch Road, Gualala

NO SCALE

ELEVATIONS

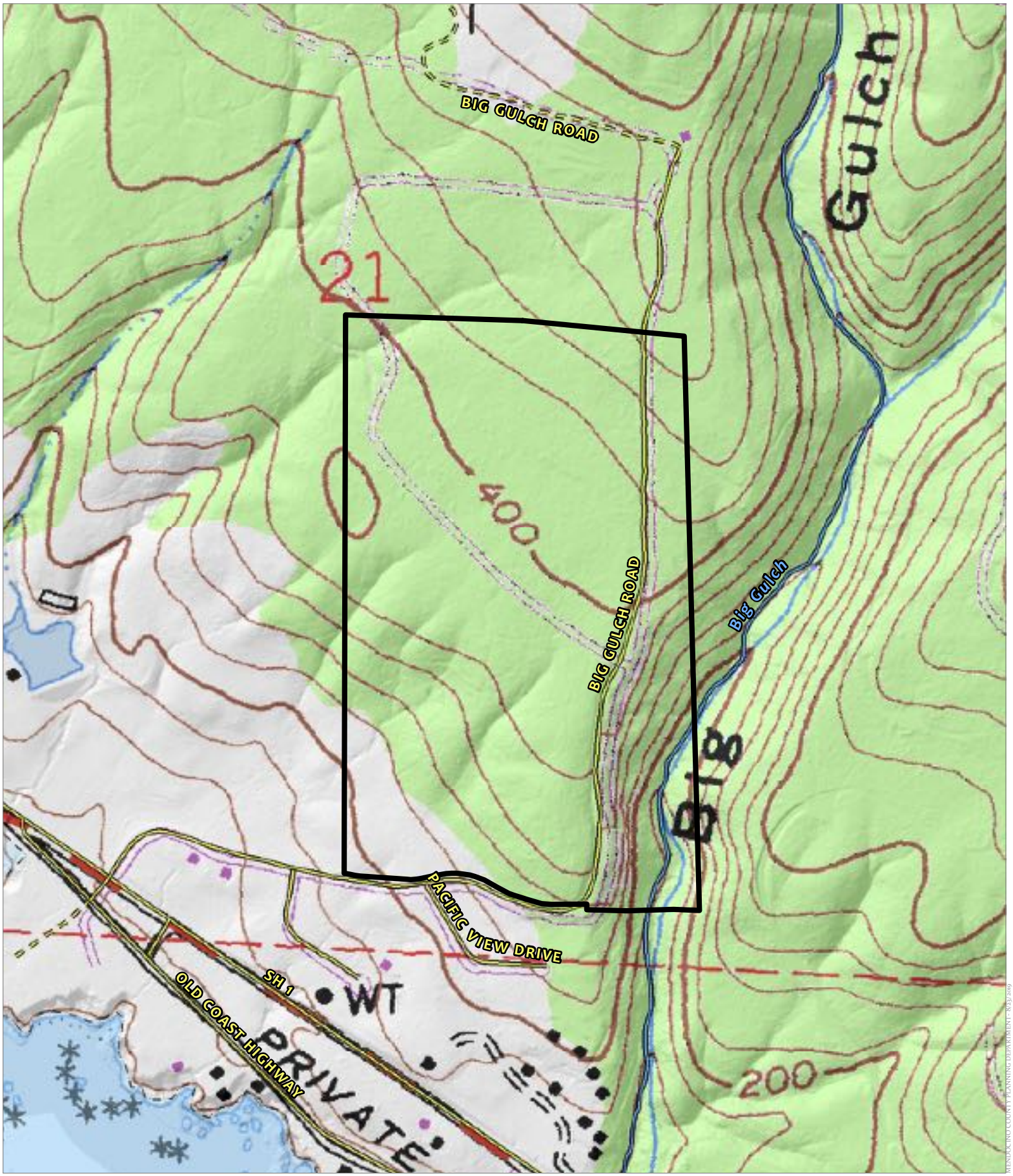

MENDOCINO COUNTY PLANNING DEPARTMENT - 8/29/2019

CASE: U 2019-0017
OWNER: BRYSON, Craig & Kathleen
APN: 145-070-01
APLCT: Telespan Communications, LLC
AGENT: Telespan Communications, LLC
ADDRESS: 46440 Big Gulch Road, Gualala

Named Rivers
Driveways/Unnamed Roads
Public Roads
Private Roads

0 250 500 Feet
0 0.0425 0.085 Miles
1:6,000

TOPOGRAPHIC MAP
CONTOUR INTERVAL IS 40 FEET

SITE PHOTOGRAPHS

Including:

- Pictures of Site and Access

3888 State Street, Suite 204; Santa Barbara, CA 93105-3164
Phone (805) 899-2700 Fax (805) 899-2775

GUALALA WIRELESS COLLOCATION
SITE PHOTOGRAPHS

Site Photo Key

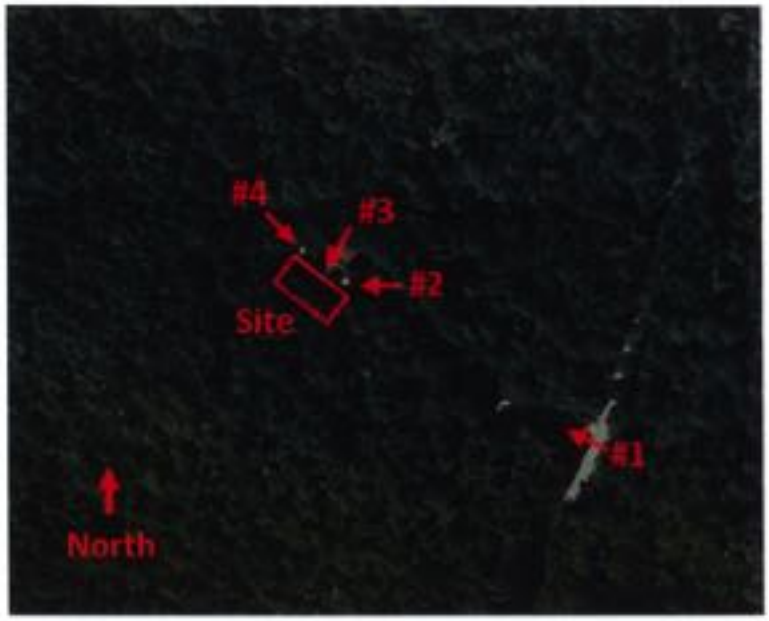

#1: Access off of Big Gulch Rd. Looking Northwest
(Site is approximately 600' past this point)

#2: Approaching Site, Looking West Toward Site from Access Rd.

#3: Standing in Front of Site, Looking Southwest Directly Toward Site

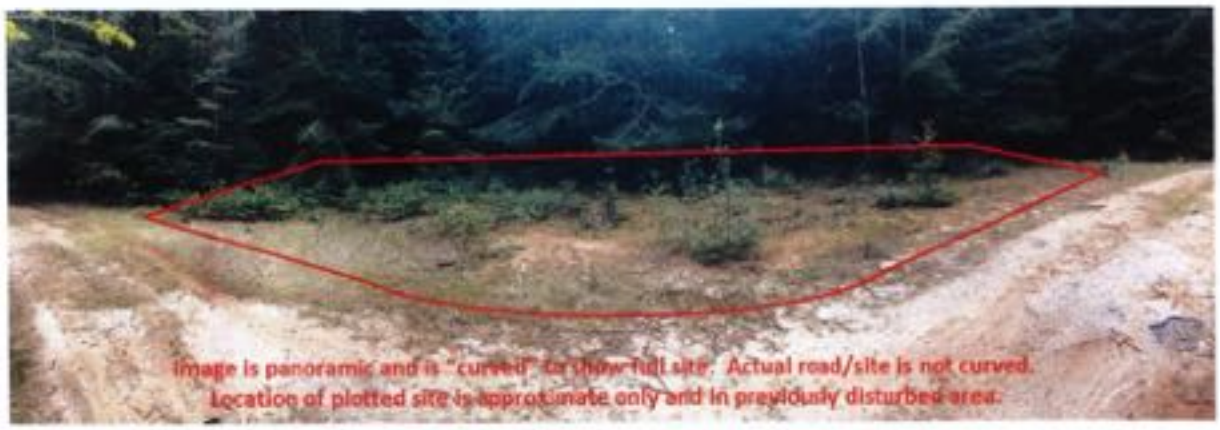

#4: Past Site, Looking Southeast Back Toward Site

COVERAGE STATUSTICS, RADIO FREQUENCY PROPAGATON MODELING OF THE SUBJECT SITE, AND TOWER HEIGHT JUSTIFICATION

Including:

- Coverage Statistics
- Radio Frequency Propagation Modeling at:
    - 190' Above Grade Level (1st rad-center)
    - 178' Above Grade Level (2nd rad-center)
    - 166' Above Grade Level (3rd rad-center)
    - 154' Above Grade Level (4th rad-center)
    - 142' Above Grade Level (point of signal failure)
- Drone Picture Taken at 142' Above Grade Level to Illustrate Tree Canopy and Topography Interference
- Radio Frequency Propagation Modeling of Existing and Proposed Communications Sites within 5 Miles Demonstrating No Coverage of Desired Area

3888 State Street, Suite 204; Santa Barbara, CA 93105-3164
Phone (805) 899-2700 Fax (805) 899-2775

TeleSpan

Coverage Area Statistics

- 8.1 Square Miles
- 1089 Parcels
- Est. Population > 1,500
- Hwy 1 Avg. Traffic Count is 4,000 Trips/Day
- Busiest Section of Hwy 1 from Bodega Bay to Mendocino

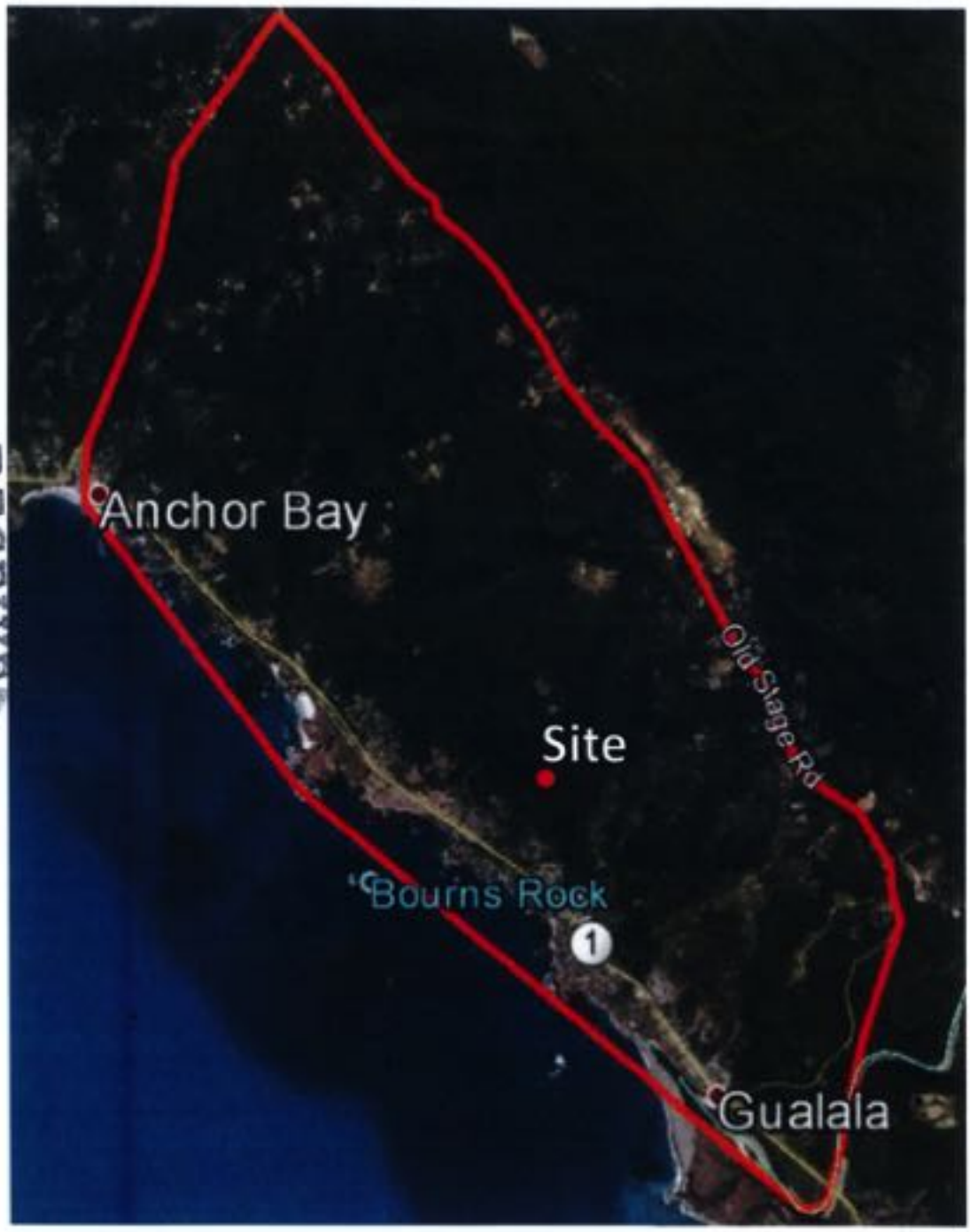

TeleSpan

Legend

- = > -70 dB (Excellent)
- = -70 to -90 dB (Good)
- = -90 to -110 dB (Marginal)

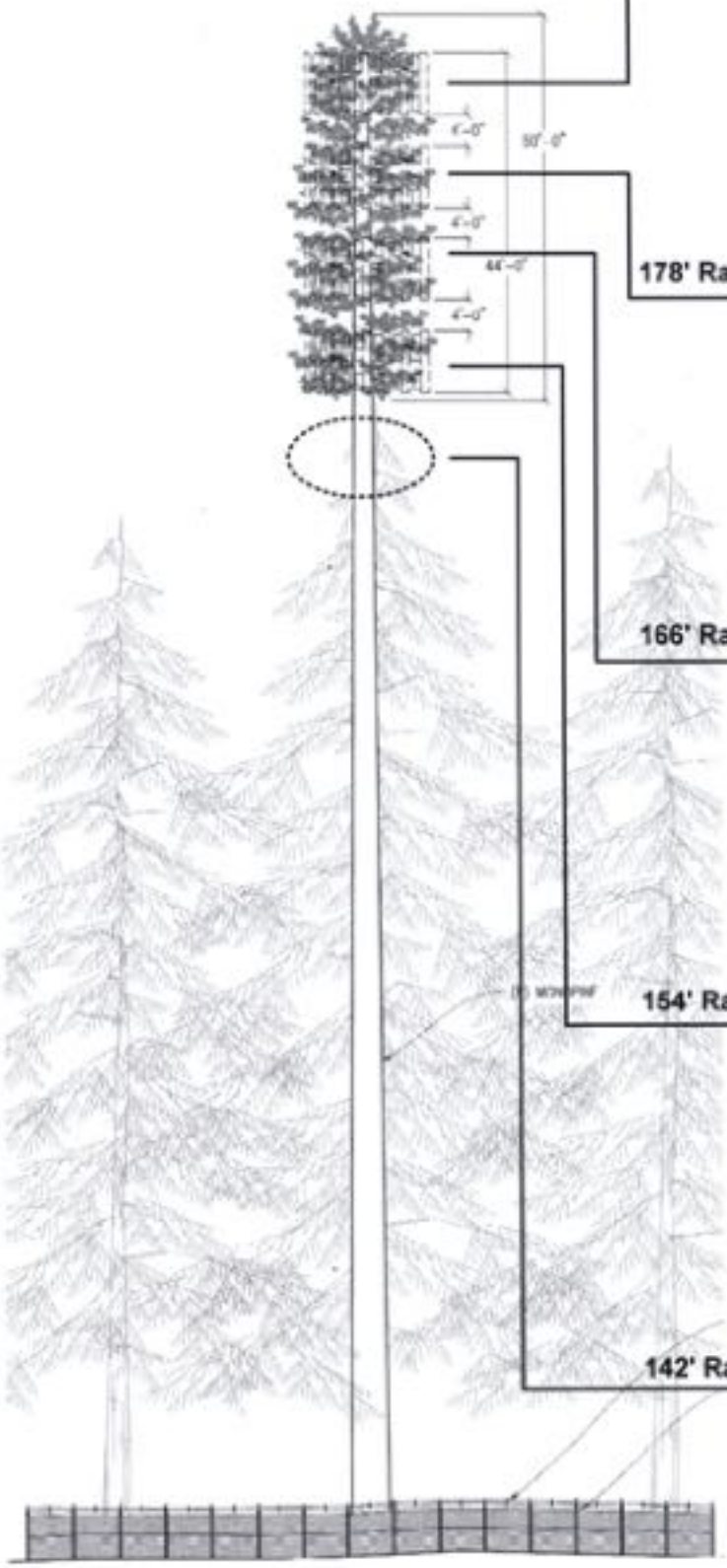

190' Rad-Center

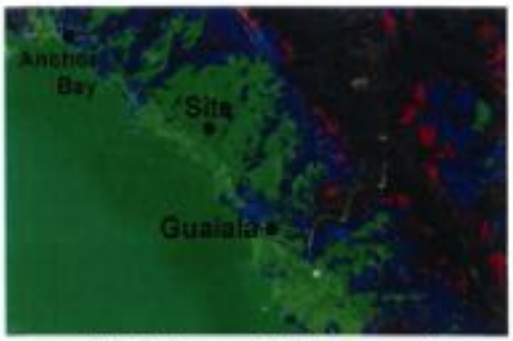

(Full size image on following pages.)

178' Rad-Center

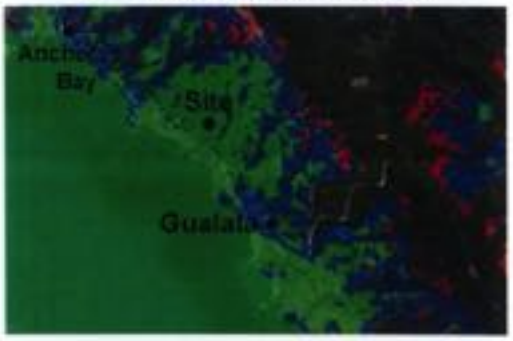

(Full size image on following pages.)

166' Rad-Center

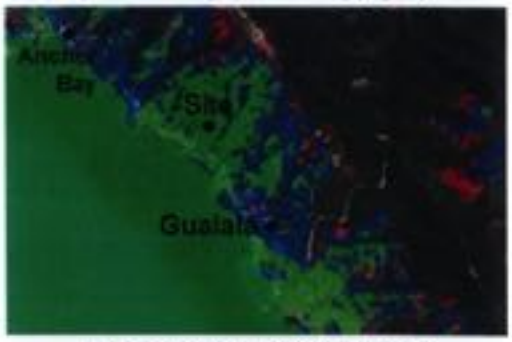

(Full size image on following pages.)

154' Rad-Center

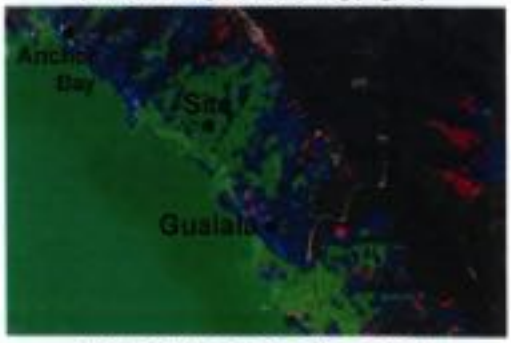

(Full size image on following pages.)

142' Rad-Center

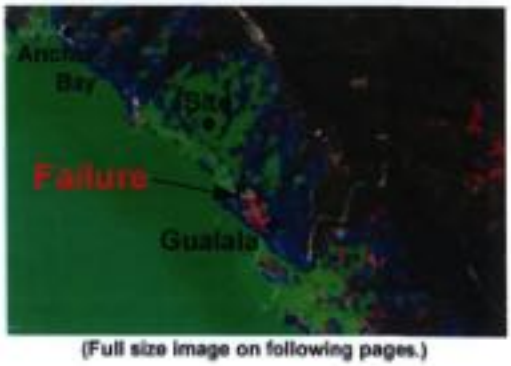

(Full size image on following pages.)

TeleSpan

190' Rad-Center

Legend

- = > -70 dB (Excellent)
- = -70 to -90 dB (Good)
- = -90 to -110 dB (Marginal)

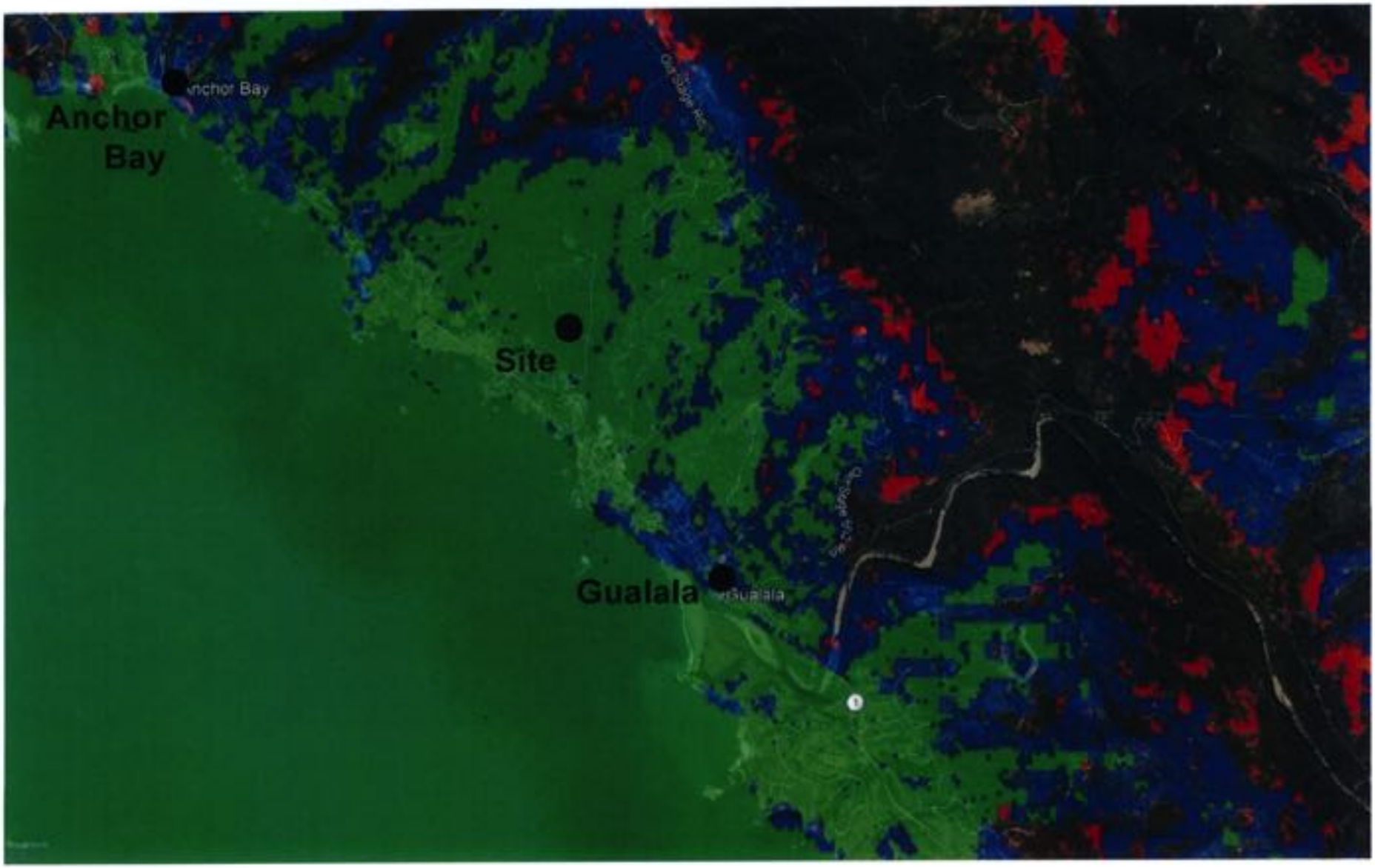

TeleSpan

178' Rad-Center

Legend
- = > -70 dB (Excellent)
- = -70 to -90 dB (Good)
- = -90 to -110 dB (Marginal)

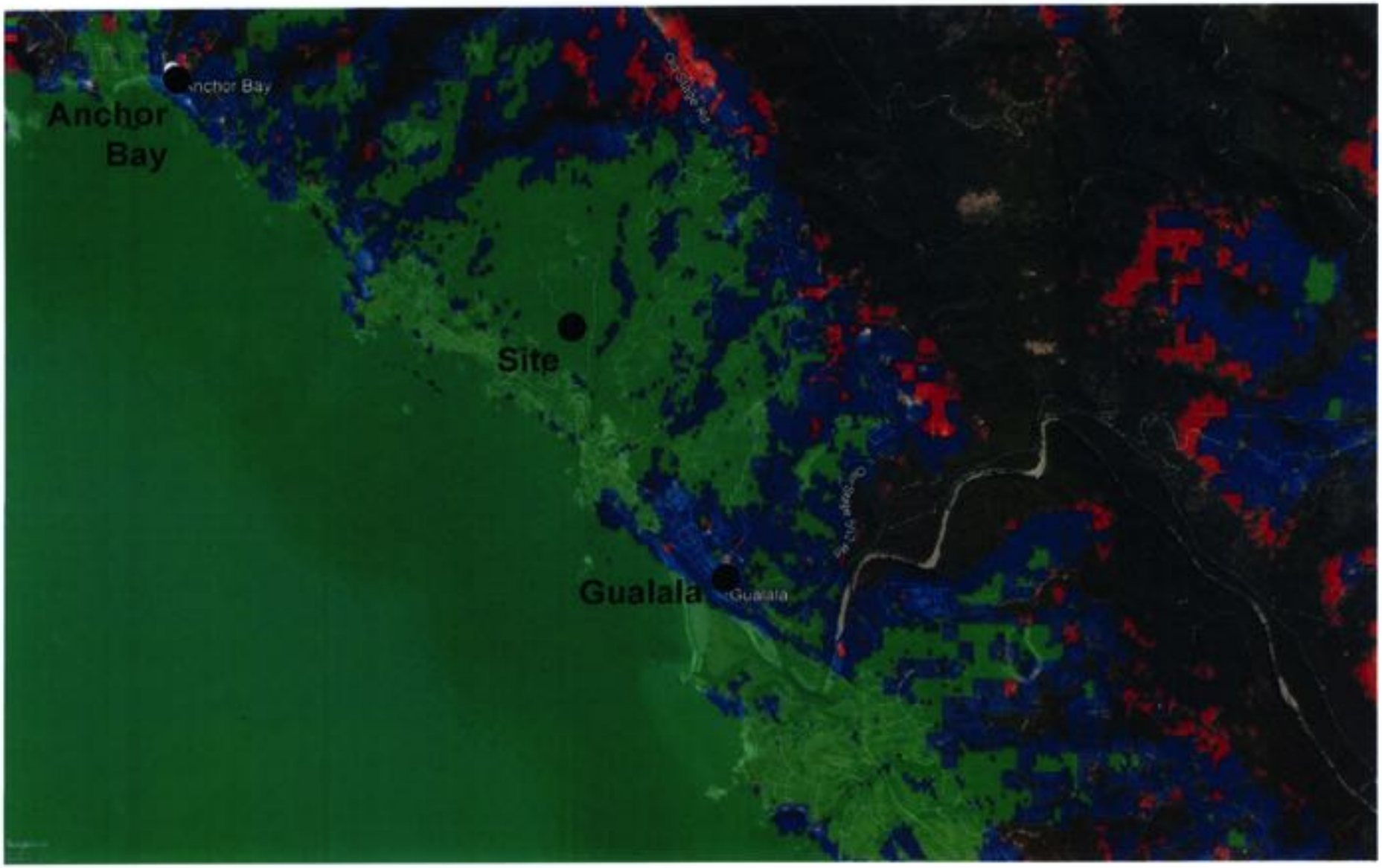

TeleSpan

Legend

= > -70 dB (Excellent)

= -70 to -90 dB (Good)

= -90 to -110 dB (Marginal)

166' Rad-Center

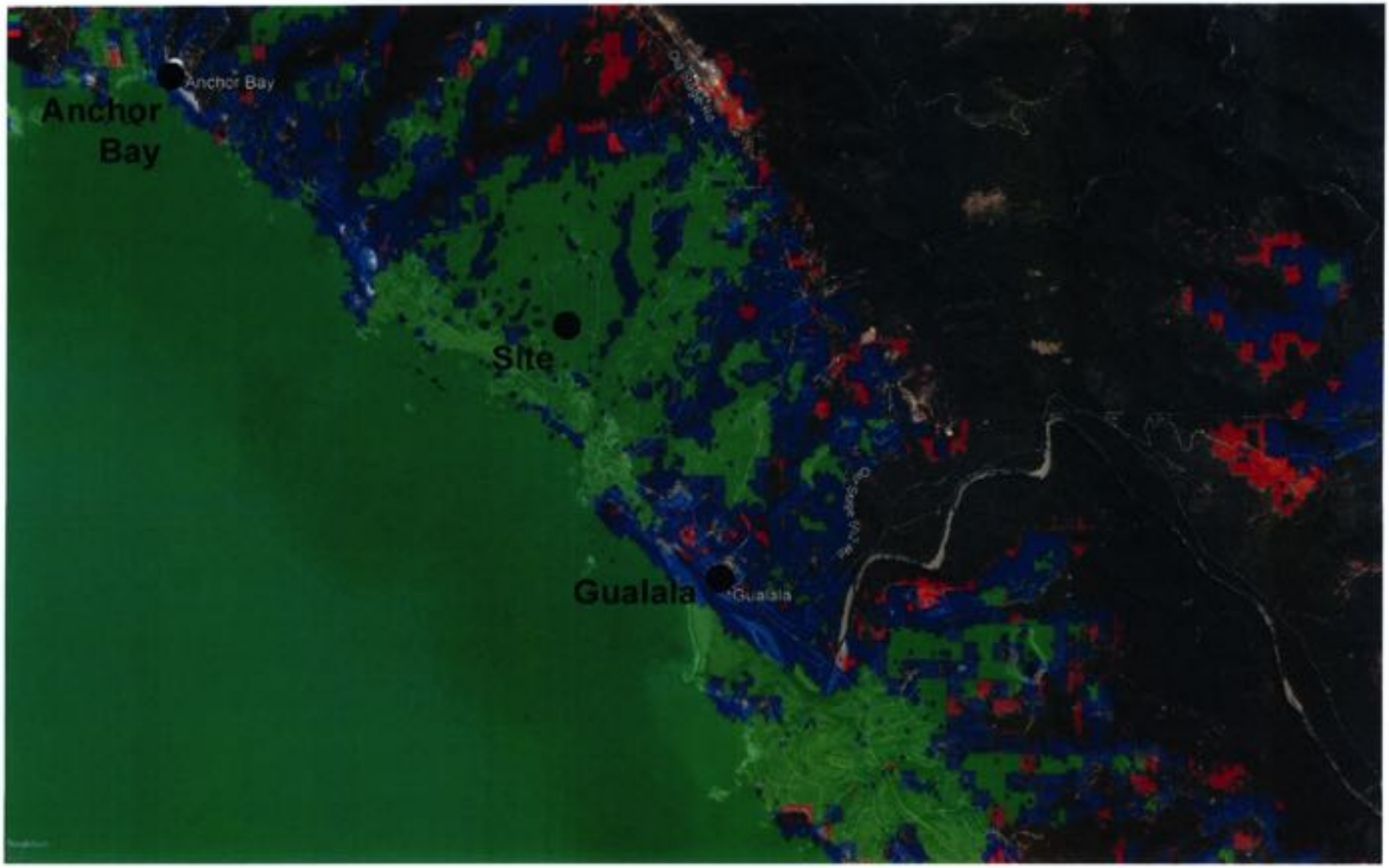

TeleSpan

Legend

= > -70 dB (Excellent)

= -70 to -90 dB (Good)

= -90 to -110 dB (Marginal)

154' Rad-Center

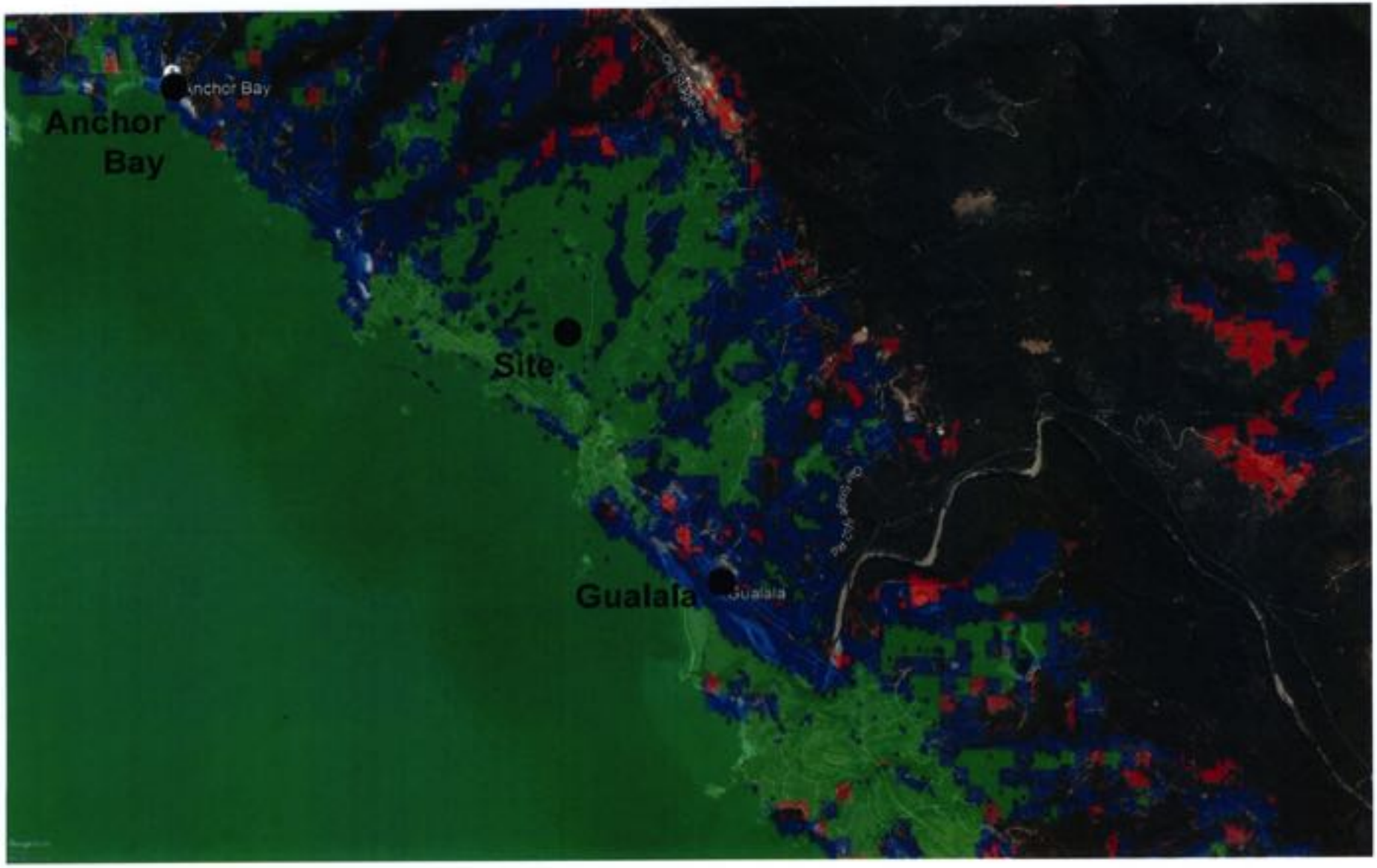

TeleSpan

Legend

= > -70 dB (Excellent)

= -70 to -90 dB (Good)

= -90 to -110 dB (Marginal)

142' Rad-Center

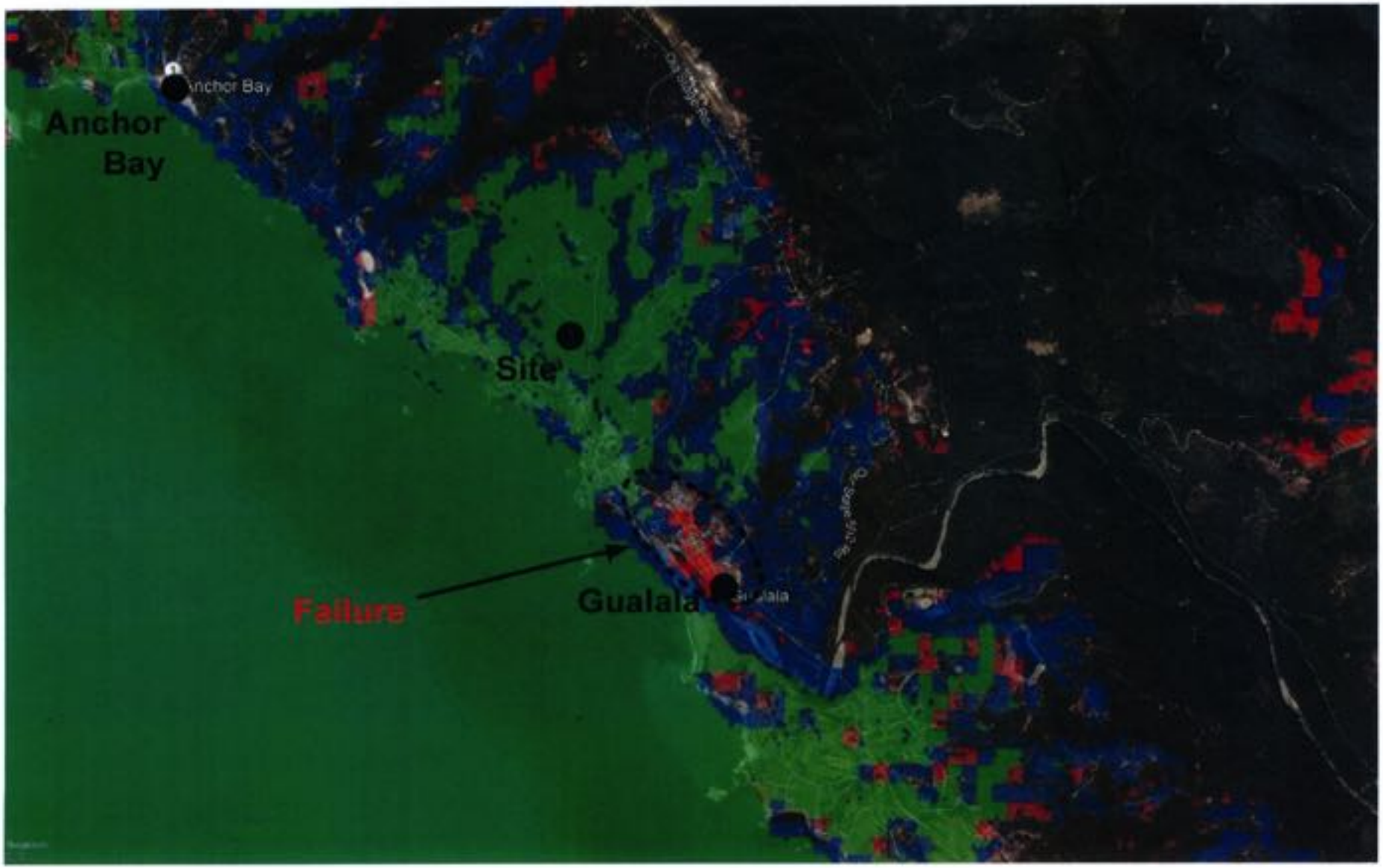

TeleSpan

Tree Canopy at 142'
(point of performance failure)

TeleSpan

Existing and Proposed Telecom Sites within 5 Miles of Project

TeleSpan

Legend

= > -70 dB (Excellent)

= -70 to -90 dB (Good)

= -90 to -110 dB (Marginal)

"Fish Rock Site"

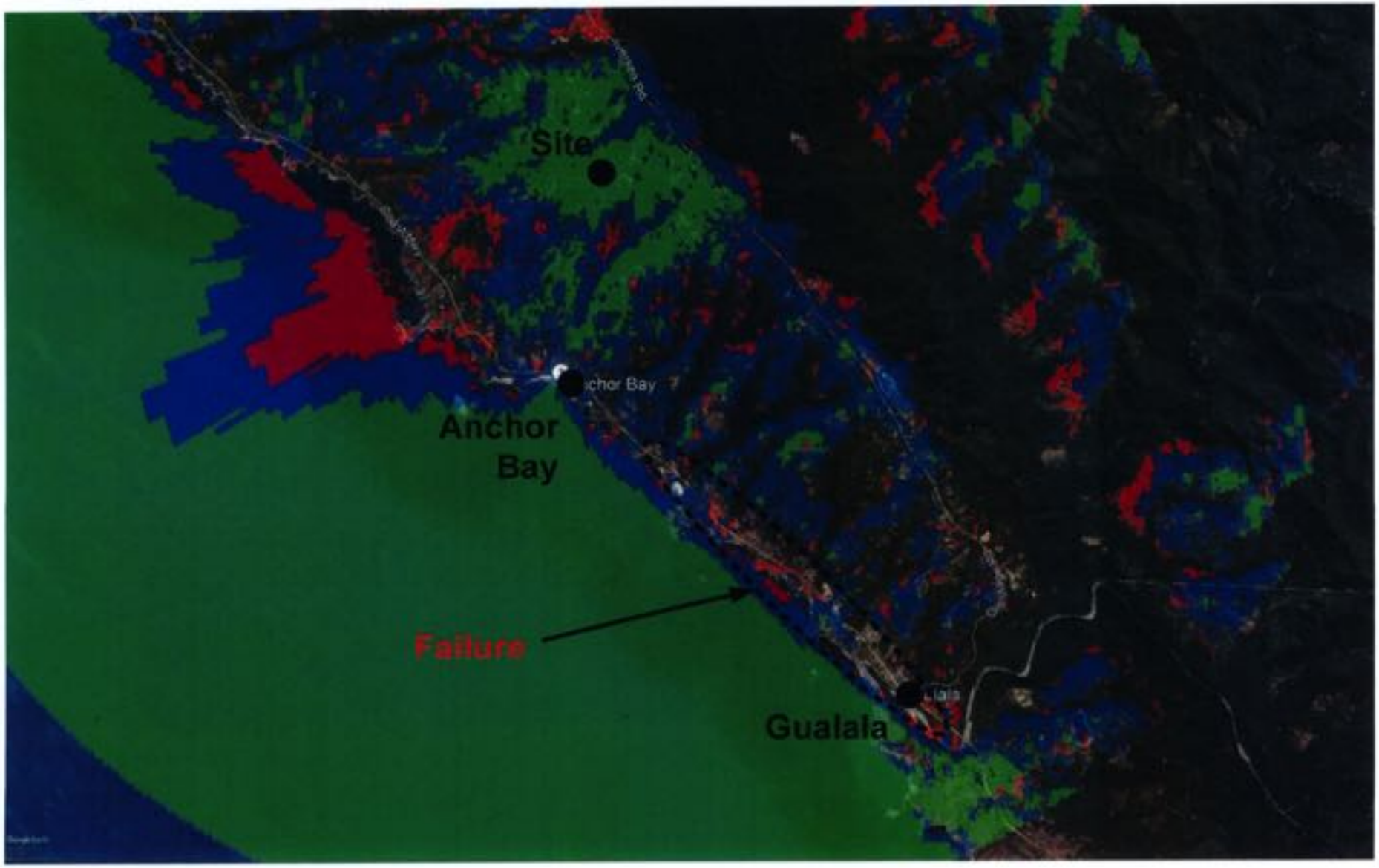

TeleSpan

"Arena School Site"
(In Process)

Legend

- = > -70 dB (Excellent)
- = -70 to -90 dB (Good)
- = -90 to -110 dB (Marginal)

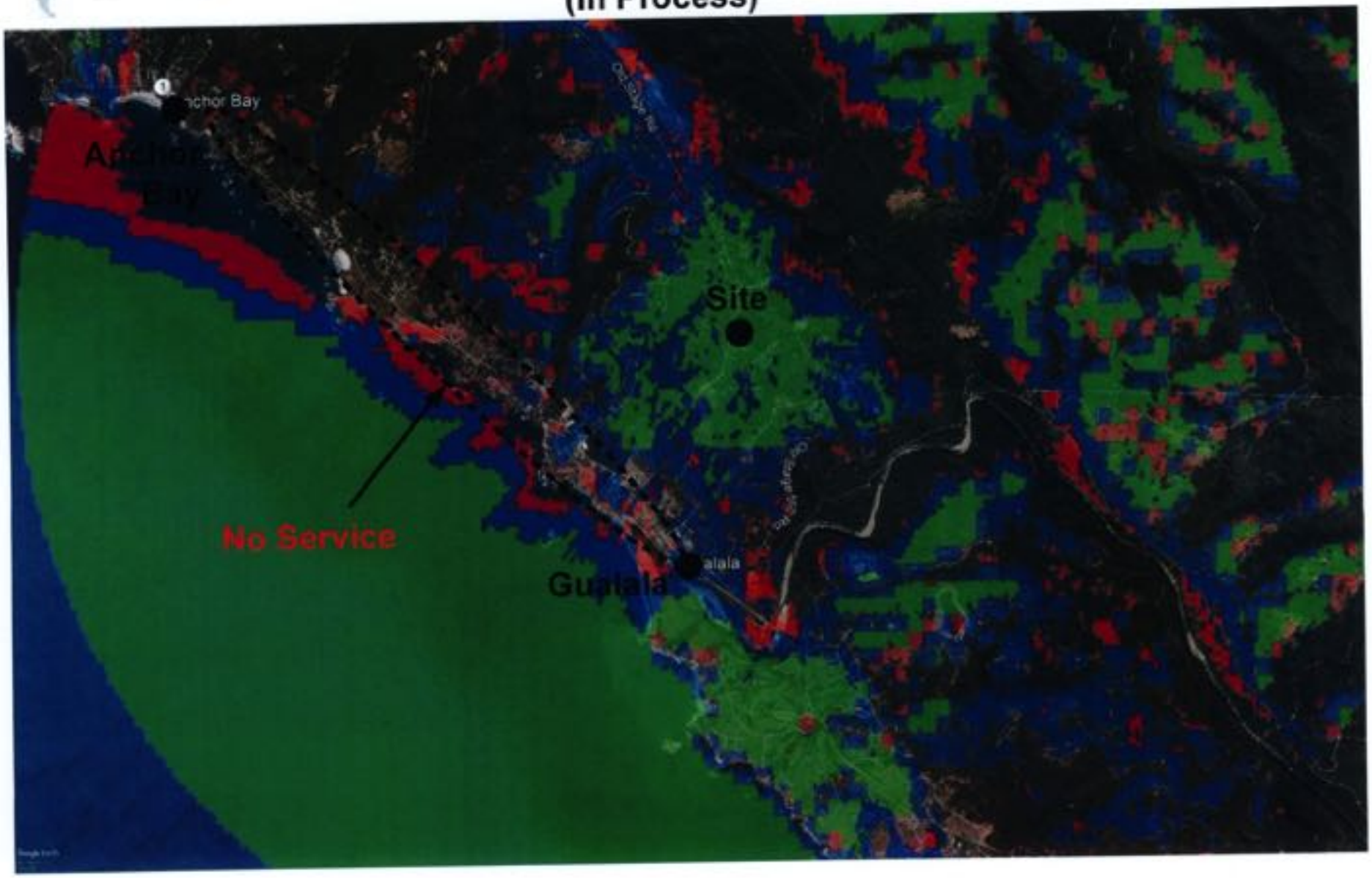

Biological Resource Assessment

Telespan Communications Bryson Tower
Telecommunications Project
Mendocino County, California

July 2019

Prepared for:

Telespan Communications
3888 State Street, Suite 204
Santa Barbara, CA 93105
&
Geist Engineering and Environmental Group, Inc. (GE^{2}G)

Prepared by:

Synthesis Planning
442 San Marin Drive
Novato, CA 94945
Contact: Cord Hute
Phone: (415) 328-7923

BIOLOGICAL RESOURCE ASSESSMENT TABLE OF CONTENTS

LIST OF TABLES.

LIST OF APPENDICES

Appendix

Summary

The proposed project is situated 0.2 miles north of the unincorporated community of Gualala and 2.3 miles southeast of the unincorporated community of Anchor Bay in unincorporated Mendocino County, California. The project is located 0.33 miles northeast of State Highway 1. This project is being undertaken to provide improved telecommunications services to the local area through the installation of a new communication tower and associated equipment. Synthesis Planning was contracted by Telespan Communications to perform this Biological Resources Assessment for the proposed project.

Three (3) vegetation communities were observed within the study area and include the following: 1) redwood-fir forest, 2) freshwater emergent wetland, and 3) ruderal vegetation. As part of this Biological Resource Assessment, we also evaluated the potential for occurrence of special-status plant species and special-status wildlife species.

Best Construction Practices and Avoidance and Minimization Measures as well as Standard Construction Conditions to prevent take of individuals discussed above are included in this report.

List of Acronyms and Abbreviations

BRA	Biological Resource Assessment
CCC	California Coastal Commission
CDFW	California Department of Fish and Wildlife
CEQA	California Environmental Quality Act
CESA	California Endangered Species Act
CNDDB	California Natural Diversity Database
CNPS	California Native Plant Society
CSC	California Species of Concern
FESA	Federal Endangered Species Act
FGC	Fish and Game Code
MBTA	Migratory Bird Treaty Act
NMFS	National Marine Fisheries Service
RWQCB	Regional Water Quality Control Board
SWPPP	Stormwater Pollution Prevention Plan
USFWS	U.S. Fish and Wildlife Service
USGS	United States Geological Survey
USACE	US Army Corps of Engineers
UTM	Universal Trans Mercator
WHR	Wildlife Habitat Relationships

1.0 Introduction

The purpose of this Biological Resource Assessment is to provide technical information and to review the proposed project study area, situated 0.2 miles north of the unincorporated community of Gualala and 2.3 miles southeast of the unincorporated community of Anchor Bay in unincorporated Mendocino County, California (see Appendix A, Figures 1 and 2). The project is located 0.33 miles northeast of State Highway 1. Surrounding land uses consist of agricultural, recreational, rural residences, and open space.

This project is being undertaken to provide improved telecommunications services to the local area through the installation of a new communication tower and associated equipment. Synthesis Planning prepared this Biological Resources Assessment (BRA) to provide sufficient detail to determine the potential effects of the proposed project on federally- and state-listed wildlife and plant species. This BRA was conducted to determine the potential for special-status vegetation communities, plant and animal species to occur within the project study area, and to identify the limitations to potential development of the project. The BRA is prepared in accordance with legal requirements found in Section 7 (a)(2) of the Endangered Species Act (16 U.S. C 1536(c)) and also provides information required for an Initial Study/Mitigated Negative Declaration as part of the California Environmental Quality Act (CEQA) review for the project. The document presents technical information upon which later decisions regarding project affects are developed.

1.1 Project Description

A review of zoning drawings indicated that the proposed action would include:

- Construction of a 50 feet by 90 feet (4,500 square feet, or 0.10 acres permanent disturbance) level pad area. The pad area would be covered with gravel on portions not used for equipment installation.

- Installation of 199-foot tall monopine communications tower;

- Installation of telecommunications equipment and other related equipment within various areas of the gravel pad;

- Installation 6 foot tall chain link fence around telecommunications site;

- Installation of 525 feet (0.10 miles) of underground power line and fiber optic cable between tower site and existing power pole/line to the southeast of tower site within existing access roadway. Right-of way would be 20 feet wide.

- Construction of improved access road – Hammerhead driveway adjacent to pad area (3,000 square feet, or 0.10 acres permanent disturbance, all of which would occur in a

previously disturbed area).

The proposed construction of the wireless facilities and access road improvements would permanently displace approximately 4,500 square feet, or 0.10 acres of undisturbed habitat areas, and temporarily disturb 13,500 square feet, or 0.31 acres of previously disturbed areas. The proposed disturbance within undisturbed areas would occur within redwood-fir forest habitat.

Staging Areas and Fueling

Storage areas for contractor equipment and materials will be determined prior to project construction activities. Telespan Communications, with the assistance of a biologist, will review the local project area and locate staging areas that are in previously disturbed areas that will not have potential to affect wildlife habitat or species. All staging areas must be approved by Mendocino County prior to use. In addition, to prevent contamination of fuel into sensitive habitats, the following measures will apply:

- The use or storage of petroleum-powered equipment shall be accomplished in a manner to prevent the potential release of petroleum materials into waters of the State and U.S.,
- Areas for fuel storage, refueling and servicing of construction equipment must be located in an upland location,
- Wash sites must be located in upland locations to ensure wash water does not flow into the stream channel or adjacent wetlands.
- All construction equipment must be in good working condition, showing no signs of fuel or oil leaks. All questionable motor oil, coolant, transmission fluid, and hydraulic fluid hoses, fittings and seals shall be replaced. The mechanical equipment shall be inspected on a daily basis to ensure no leaks. All leaks shall be repaired in the equipment staging area or other suitable location prior to resumption of construction activity.
- Oil absorbent and spill containment materials shall be located on site when mechanical equipment is in operation within 100 feet of a waterway. If a spill occurs, no additional work shall occur in-channel until, 1) the mechanical equipment is inspected by the contractor and the leak has been repaired, 2) the spill has been contained, and 3) CDFW and Sonoma County are contacted and have evaluated the impacts of the spill.

Construction Scheduling

The estimated time period for construction is 90 working days for the entire project. Work will begin as soon as all regulatory clearances and permits are obtained.

Operations and Maintenance

The facilities would be constructed to current construction-industry standards and codes.

Construction Best Management Practices

Construction BMPs will be incorporated in the construction of the project and include, but are not limited to, the following:

- To avoid debris contamination into drainages and other sensitive wildlife habitats, silt fence or other sediment control devices will be placed around construction sites to contain spoils from construction excavation activities.

- Surveys for identified special-status species by qualified biologists shall be conducted at the appropriate times before construction starts to determine occupancy at the site. If no special-status species are found, no further action other than the Best Management Practices identified above are required. If individuals are found, including plants or nesting birds, a buffer zone around the species or nest will be required at a sufficient distance to prevent take of individual plants, or until after the nesting season.

- Due to the potential for special-status species to occur, move through, or into the project area, an on-site biological monitor, shall at a minimum, check the ground beneath all equipment and stored materials each morning prior to work activities during disturbing activities to prevent take of individuals. All pipes or tubing four (4) inches or greater shall be sealed by the relevant contractor with tape at both ends to prevent animals from entering the pipes at night. All trenches and other excavations shall be backfilled the same day they are opened, or shall have an exit ramp built into the excavation to allow animals to escape.

- Environmental Awareness Training shall be presented to all personnel working in the field on the proposed project site. Training shall consist of a brief presentation in which biologists knowledgeable of endangered species biology and legislative protection shall explain endangered species concerns. Training shall include a discussion of special-status plants and sensitive wildlife species. Species biology, habitat needs, status under the Endangered Species Act, and measures being incorporated for the protection of these species and their habitats shall also be discussed.

- Project site boundaries shall be clearly delineated by stakes and /or flagging to minimize inadvertent degradation or loss of adjacent habitat during project operations. Staff and/or its contractors shall post signs and/or place fence around the project site to restrict access of vehicles and equipment unrelated to project operations.

2.0 Study Methodology

This Biological Resource Assessment used the best available scientific and commercial data to evaluate the potential effects to biological resources from the proposed project. Literature review, aerial imagery and field surveys informed the descriptions of the vegetation communities, identification of present and past occurrences of special-status species in the vicinity of the proposed project, and the assessment of habitats for special-status animal species.

2.1 Literature Search

Information on special-status plant species was compiled through a review of the literature and database searches. Database searches for known occurrences of special-status species focused on U.S. Geologic Service 7.5-minute topographic quadrangles. The following sources were reviewed to determine which special-status plant and wildlife species have been documented in the vicinity of the project site:

- U.S. Fish and Wildlife Service (USFWS) quadrangle species lists (USFWS 2019)
- USFWS list of special-status animals for Sonoma County (USFWS 2019)
- California Natural Diversity Database records (CNDDB) (CNDDB 2019)
- California Department of Fish and Wildlife's (CDFW) Special Animals List (CDFW 2019)
- State and Federally Listed Endangered and Threatened Animals of California (CDFW 2019)
- California Native Plant Society (CNPS) Electronic Inventory records (CNPS 2019)
- CDFG publication "California's Wildlife, Volumes I-III" (Zeiner et al. 1990)

The USFWS electronic list of Endangered and Threatened Species was queried electronically (www.fws.gov/sacramento/es_spp_lists-overview.htm). We also reviewed the CalFish IMAPS Viewer (www.calfish.org/DataandMaps/CalFishGeographicData), developed by CDFW Biogeographic Branch for analysis of fisheries.

The CDFW BIOS website and the *California Essential Habitat Connectivity Project: A strategy for conserving a connected California* (Spencer et al. 2010) were reviewed for wildlife movement information. The CDFW BIOS website and the CNDDB were review for documented nursery sites. Other sources of information regarding reported occurrences include locations previously reported to the U.C Berkeley Museum of Vertebrate Zoology and the California Academy of Sciences.

2.2 Personnel and Survey Dates

Cord Hute, wildlife biologist of Synthesis Planning, conducted biological surveys of the project site on May 1, 2019, May 30 2019, and June 24, 2019. Mr. Hute analyzed on-site and buffer area habitats for suitability for special-status plant and animal species during these surveys.

2.3 Impact Assessment Methodology

We examined the on-site vegetation communities, present and past occurrence locations of federally and state listed species and federal and state species of concern within close proximity of the proposed project area, and habitats for special-status plant and animal species. Based on the current site conditions, we evaluated the potential for occurrence on the site for special-status biological resources and used the project description to determine any potential direct or indirect effects.

We based our determination of whether the proposed project may result in adverse impacts to federally-listed special-status species, based on guidelines established by the USFW under Section 7(a) of the Federal Endangered Species Act (FESA), in which a project that may have an adverse effect impact on listed biological resources must be assessed. FESA states that, "each federal agency shall...insure that any *action authorized, funded, or carried out by such agency (hereinafter in this section referred to as an "agency action") is not likely to jeopardize the continued existence of any endangered or threatened or result in the destruction or adverse modification of habitat of such species." Thus, components of the proposed project were deemed to have an adverse impact on special-status biological resources if they could result in effects as described in the above statement to any listed species or its habitat.

We based our determination of whether the proposed project may result in adverse impacts to State special-status species based on CEQA, the CDFW and the CNPS guidelines for special status plants and animals.

We also evaluated potential impacts from the project to habitats not occupied by species but for which habitats occurred.

3.0 Environmental Baseline

The project area is located within the North Coast Bioregion (Welsh 1994), a bioregion that encompasses the area from southwestern Oregon to southern Monterey County and contains the southern extent of the mixed hardwood forest with redwood. The North Coast Bioregion is delineated by the Pacific Ocean on the west and the Coast Ranges Mountains on the east and encompasses those lands west of the highest ridgeline dividing areas that drain directly into the Pacific Ocean from those areas that drain toward the interior (Welsh 1994). Habitats within this bioregion include both mesic (moist) habitats, such as freshwater marsh, and xeric (dry) habitats, such as chaparral, and are typical of a Mediterranean type climate. Average rainfall in the area is 40 inches (NCRCD 2004).

3.1 Wetlands and Waters of the U.S. and State

Wetlands are generally considered to be areas that are periodically or permanently inundated by surface or ground water, and support vegetation adapted to life in saturated soil. Wetlands are recognized as important features on a regional and national level due to their high inherent value to fish and wildlife, use as storage areas for storm and flood waters, and water recharge, filtration, and purification functions. Technical standards have been developed as a method of defining wetlands through consideration of three criteria: hydrology, soils, and vegetation (USACE 1987).

The U.S. Army Corps of Engineers (USACE), CDFW, and Regional Water Quality Control Board (RWQCB) have jurisdiction over modifications to stream channels, river banks, lakes, and other wetland features. Jurisdiction of the Corps is established through the provisions of Section 404 of the Clean Water Act, which prohibits the discharge of dredged or fill material into "waters" of the United States without a permit, including certain wetlands and unvegetated "other waters of the U.S." The Corps also has jurisdiction over navigable waters, including tidally influenced ones below Mean High Water, under Section 10 of the Rivers and Harbors Act. Jurisdictional authority of the CDFG is established under Section 1602 of the Fish and Game Code, which pertains to activities that would disrupt the natural flow or alter the channel, bed, or bank of any lake, river, or stream. The Fish and Game Code states that it is "unlawful to substantially divert or obstruct the natural flow or substantially change the bed, channel or bank of any river, stream or lake" without notifying the Department, incorporating necessary mitigation, and obtaining a Streambed Alteration agreement. The Wetlands Resources Policy of the CDFW states that the Fish and Game Commission will "strongly discourage development in or conversion of wetlands... unless, at a minimum, project mitigation assures there will be no net loss of either wetland habitat values or acreage." Jurisdictional authority of the RWQCB is established pursuant to Section 401 of the Clean Water Act, which typically requires a water quality certification when an individual or nationwide permit is issued by the Corps. The RWQCB also has jurisdiction over "waters of the State" under the Porter-Cologne Water Quality Control Act.

In addition to the definition and classification procedures developed by federal agencies, some California resource and regulatory agencies have developed their own wetland definition and

classification procedures. Although these State agency procedures are generally based on the USFWS and USACE definition and classification procedure described above, they do differ in specific details.

In the California coastal zone , the California Coastal Commission (CCC), with the assistance of the Department of Fish and Wildlife (CDFW) is responsible for determining the presence of wetlands subject to regulation under the California Coastal Act. As the primary wetland consultant to the CCC, the CDFW essentially relies on the USFWS wetland definition and classification system, with some minor changes in classification terminology, as the methodology for wetland determinations. However, one important difference in the CDFW delineation process compared to the USFWS process, is that the CDFW only requires the presence of **one** attribute (e.g., hydrology, hydric soils, or hydrophytic vegetation) for an area to qualify as a wetland.

In contrast to the detailed definition and classification system adopted by the CDFW, Section 30121 of the California Coastal Act (1976), the statute governing the CCC, has an exceptionally broad definition for a wetland:

Wetland means lands within the coastal zone which may be covered periodically or permanently with shallow water and include saltwater marshes, freshwater marshes, open or closed brackish water marshes, swamps, mudflats, or fens.

However, the CCC Administrative Regulations (Section 13577 (b)) provides a more explicit definition:

Wetlands are lands where the water table is at, near, or above the land surface long enough to promote the formation of hydric soils or to support the growth of hydrophytes, and shall also include those types of wetlands where vegetation is lacking and soil is poorly developed or absent as a result of frequent or drastic fluctuations of surface water levels, wave action, water flow, turbidity or high concentrations of salt or other substance in the substrate. Such wetlands can be recognized by the presence of surface water or saturated substrate at some time during each year and their location within, or adjacent to, vegetated wetlands or deepwater habitats.

The CCC with assistance from the CDFW, is responsible for determining the presence and size of a wetland subject to regulation under the Coastal Act. Although the exact procedure has varied somewhat in the past, the CDFW wetland definition and classification system is the delineation methodology generally followed by the CCC.

Numerous State agencies regulate, manage, or otherwise control natural resources within California through a wide variety of general and specific laws and directives, which are carried out by resource departments, commissions, and boards.

The Keene–Nejedly California Wetlands Preservation Act (1976) is the only State legislation besides the Coastal Act to define wetlands. The act states there "is a need for an affirmative and sustained public policy and program directed at their [wetlands] preservation, restoration, and

enhancement, in order that such wetlands shall continue in perpetuity". The act provided for acquisition of ten important wetlands, using funds from several sources, and was intended to support preparation of a statewide wetlands plan. However, acquisition funds were not allocated in 1976.

The State Regional Water Quality Control Boards primary role is to enforce the federal Clean Water Act, and in doing so, assert regulatory authority over development activities affecting the water quality of navigable water and wetlands. Under Section 401(a)(1) of the Clean Water Act: *Any applicant for a Federal license or permit to conduct any activity...which may result in any discharge into the navigable waters, shall provide the licensing or permitting agency a certification from the State...that any such discharge will comply with the applicable provisions of Sections 301, 302, 303, 306, and 307 of this Act.*

In turn, California Code of Regulations Section 3831(k) defines the State certification required under Section 401 as:

'Water Quality Certification' means a certification that there is a reasonable assurance that an activity which may result in a discharge to navigable waters of the United States will not violate water quality standards, where the activity requires a federal license or permit.

In practice, the regional boards have applied their authority over water quality standards to all waters of the State, including wetlands. Discharge to wetlands and riparian wetlands may violate water quality objectives (e.g., turbidity, temperature, or salinity); impair beneficial uses (e.g., groundwater recharge, recreation, wildlife habitat, fish migration, and shellfish harvesting); and conflict with the anti-degradation policy.

The California Department of Fish and Wildlife has Statewide resource responsibilities and authority that directly and indirectly influence projects and activities in coastal zone wetlands. In addition to being responsible for the maintenance and protection of California's fish and wildlife, the CDFW has authorities under California's Public Resources Code, and the federal Fish and Wildlife Coordination Act to regulate or comment on activities in wetland and riparian areas. The CDFW also assumes primary responsibility for implementation of the California State Endangered Species Act, and the Streambed Alteration Agreement (Fish and Game Code Sections 1601–1603). This agreement is one of the State's few direct legal instruments for the protection of streams, rivers, and lakes. Additionally, as mentioned previously, the DFG is a primary consultant to the CCC regarding the affects of coastal development on wetlands and other natural resources. The CDFW also comments directly to the USACE concerning fish and wildlife aspects of Section 10 and Section 404 permits. CDFW's official position regarding the protection of wetlands is that development projects should not result in a net loss of either wetland acreage or wetland habitat value.

Development or alteration of California's coastal wetlands is primarily regulated by Section 30233(a) of the Coastal Act, which states:

The diking, filling, or dredging of open coastal waters, wetlands, estuaries, and lakes shall be permitted in accordance with other applicable provisions of this division, where there is no feasible[24] less environmentally damaging alternative, and where feasible mitigation measures have been provided to minimize adverse environmental effects, and shall be limited to the following:

(1) New or expanded port, energy, and coastal-dependent industrial facilities, including commercial fishing facilities.
(2) Maintaining existing, or restoring previously dredged depths in existing navigational channels, turning basins, vessel berthing and mooring areas, and boat launching ramps.
(3) In wetland areas only, entrance channels for new or expanded boating facilities; and in a degraded wetland, identified by the Department of Fish and Game pursuant to subdivision (b) of Section 30411, for boating facilities if, in conjunction with such boating facilities, a substantial portion of the degraded wetland is restored and maintained as a biologically productive wetland. The size of the wetland area used for boating facilities, including berthing space, turning basins, necessary navigation channels, and any necessary support service facilities, shall not exceed 25 percent of the degraded wetland.
(4) In open coastal waters, other than wetlands, including streams, estuaries, and lakes, new or expanded boating facilities and the placement of structural pilings for public recreational piers that provide public access and recreational opportunities.
(5) Incidental public service purposes, including but not limited to, burying cables and pipes or inspection of piers and maintenance of existing intake or outfall lines.
(6) Mineral extraction, including sand for restoring beaches, except in environmentally sensitive areas.
(7) Restoration purposes.
(8) Nature study, aquaculture, or similar resource dependent activities.

A delineation of wetlands and watercourses within the project study area was conducted by Synthesis Planning wetland ecologists during the June 24, 2019 site visit. The CCC has a one (1) parameter method of defining the boundary of a wetland. Unlike that of the USACE and USFWS method of requiring the identification of three (3) parameters [wetland vegetation, wetland soils, and wetland hydrology], the CCC only requires one (1) parameter.

Synthesis Planning identified one (1) area of freshwater emergent wetland in the project buffer area adjacent to the existing access road to the proposed tower site (see Appendix E). The wetland area measures approximately 591 square feet, or 0.014 acres in size. This wetland area is located outside of the areas proposed for ground disturbance during proposed construction activities, and therefore, will not be impacted during project implementation.

3.2 Vegetation Communities and Wildlife Habitat

Wildlife habitat classifications for this report is based on the California Department of Fish and

Game's Wildlife Habitat Relationships (WHR) System (CDFG 1988) which places an emphasis on dominant vegetation, vegetation diversity and physiographic character of the habitat. The value of a site to wildlife is influenced by a combination of the physical and biological components of the immediate environment, and includes such features as type, size, and diversity of vegetation communities present and their degree of disturbance. As a plant community is degraded by loss of understory species, creation of openings, and a reduction in canopy area, a loss of structural diversity generally results. Degradation of the structural diversity of a community typically diminishes wildlife habitat quality, often resulting in a reduction of wildlife species diversity.

Vegetation communities are often classified based on the dominant plant species within the community. Wildlife habitats are typically distinguished by vegetation type, with varying combinations of plant species providing different resources for use by wildlife. As a result, wildlife habitats are often classified on a more inclusive manner of the structure of the habitat rather than the specifics of the plant species, resulting in several vegetation communities occurring under one type of wildlife habitat.

The following is a discussion of existing wildlife habitats found within the proposed project sites and buffer areas, and the wildlife species they support. Four (4) vegetation community types were observed within the study area. Where appropriate vegetation community types are described using The Manual of California Vegetation (Sawyer, et. al. 2009). Vegetation types observed were: 1) redwood-fir forest, 2) freshwater emergent wetland, and 3) ruderal vegetation.

1. Redwood-fir forest was observed within the entire proposed tower location, and the buffer area of the tower site and existing access road. This forest type is dominated by second- growth Sequoia sempervirens and *Pseudotsuga menziesii*. *Lithocarpus densifloras var. densifloras* is common in the understory. *Pinus muricata* is common on the poor, drier soil of the ridge and it and *Arbutus menziesii* are pioneers in extending the forest down slope along the water courses. *Abies grandis* is found on the lower west facing slopes. Understory shrubs include *Gaultheria shallon*, *Vaccinium ovatum* and *Rhododendron macrophyllum*. *Polystichum munitum* and *Oxalis oregana* are abundant on the Redwood forest floor. This vegetative community is restricted to coastal areas of California where temperature regimes are relatively stable and within the influence of summer coastal fog and inland marine air flows. This community is often comprised of redwoods and other conifers and hardwood tree species. Physical stand features vary from old growth characteristics of uniform size and height, dense crown, with dense understory shrubs; second-growth structure of even-aged trees with an open, park-like appearance; and stands intermixed with annual grassland and/or other forest communities.

2. Freshwater emergent wetland was observed in one (1) location of the project buffer area adjacent to the existing access road to the proposed tower site. This wetland area is located outside of the area proposed for ground disturbance during construction activities, and therefore, will not be impacted during project implementation. Freshwater emergent wetlands are characterized by erect, rooted herbaceous hydrophytes. Dominant vegetation generally consists of perennial monocots up to 6.6 feet tall. All emergent wetlands are flooded frequently,

enough so that the roots of the vegetation prosper in an anaerobic environment. The acreage of fresh emergent wetlands in California has decreased dramatically since the turn of the century due to drainage and conversion to other uses, primarily agriculture. Fresh emergent wetlands are among the most productive wildlife habitats in California. They provide food, cover, and water for more than 160 species of birds and numerous mammals, reptiles, and amphibians. Many species rely on fresh emergent wetlands for their entire life cycle. Wildlife species commonly found in this community include song sparrows (*Melospiza melodia*), red-winged blackbirds (*Agelaius phoeniceus*), raccoons (*Procyon lotor*), California voles (*Microtus californicus*), California ground squirrel (*Spermophilus beecheyi*), black-tailed jackrabbit (*Lepus californicus*), black-tailed deer (*Odocoileus hemionus columbianus*), and skunks (*Mephitis sp.*). This community is a sensitive community because of historic and continuing loss of wetland habitats from agricultural conversion, urbanization, and flood control development.

3. Ruderal vegetation was observed within the existing access road to the proposed communications tower site. This vegetation type is comprised mostly of non-native weedy herbaceous forb plants.

4.0 Special-Status Species and Their Habitats

4.1 Regulatory Requirements

4.1.1 Federal Endangered Species Act (FESA)

To determine whether the proposed project may result in adverse effects to federally listed species, the criteria used was based on guidelines established by the USFW under Section 7(a) of the FESA, in which a project that may have an adverse effect on listed biological resources must be assessed. FESA (16 U.S. Code [USC 1531–1544) provides for the conservation of species that are Endangered or Threatened throughout all or a significant portion of their range, as well as the protection of habitats on which they depend.

Section 7 requires federal agencies to consult with USFWS or NMFS, or both, before performing any action (including actions such as funding a program or issuing a permit) that may affect listed species or designated Critical Habitat. The section 7 consultations are designed to assist Federal agencies in fulfilling their duty to ensure federal actions "do not jeopardize" the continued existence of a species or destroy or adversely modify Critical Habitat.

The USFWS defines temporary and permanent effects as areas denuded, manipulated, or otherwise modified from their pre-project conditions, thereby removing one or more essential components of a listed species' habitat as a result of project activities that include, but are not limited to, construction, staging, storage, lay down, vehicle access, parking, etc. According to the USFWS, temporary effects are limited to one construction season and, at a minimum, are fully restored to baseline habitat values or better within one year following initial disturbance. Permanent effects are not temporally limited and include all effects not fulfilling the criteria for temporary effects.

4.1.2 Federal Migratory Bird Treaty Act

The Migratory Bird Treaty Act (MBTA) (Title 16, United States Code [USC], Part 703) enacts the provisions of treaties between the United States, Great Britain, Mexico, Japan, and the Soviet Union and authorizes the U.S. Secretary of the Interior to protect and regulate the taking of migratory birds. It establishes seasons and bag limits for hunted species and protects migratory birds, their occupied nests, and their eggs (16 USC 703, 50 Code of Federal Regulations [CFR] 21, 50 CFR 10). Most actions that result in taking of, or the permanent or temporary possession of, a protected species constitute violations of the MBTA. The MBTA also prohibits destruction of occupied nests. The Migratory Bird Permit Memorandum (MBPM-2) dated April 15, 2003, clarifies that destruction of most unoccupied bird nests (without eggs or nestlings) is permissible under the MBTA; exceptions include nests of federally threatened or endangered migratory birds, bald eagles (*Haliaeetus leucocephalus*), and golden eagles (*Aquila chrysaetos*). USFWS is responsible for overseeing compliance with the MBTA.

4.1.3 California Endangered Species Act (CESA)

The California Endangered Species Act (CESA (FGC §§ 2050–2116) is administered by CDFW. The CESA prohibits the "taking" of listed species except as otherwise provided in state law. The CESA includes FGC Sections 2050–2116, and policy of the state to conserve, protect, restore, and enhance any endangered species or any threatened species and its habitat. The CESA requires mitigation measures or alternatives to a proposed project to address impacts to any State listed endangered, threatened or candidate species, or if a project would jeopardize the continued existence of any endangered or threatened species or result in the destruction or adverse modification of habitat essential to the continued existence of those species, if there are reasonable and prudent alternatives available consistent with conserving the species or its habitat which would prevent jeopardy. Section 86 of the FGC defines take as "hunt, pursue, catch, capture, or kill, or attempt to hunt, pursue, catch, capture, or kill." Unlike the ESA, CESA applies the take prohibitions to species under petition for listing (state candidates) in addition to listed species. Section 2081 of the FGC expressly allows CDFW to authorize the incidental take of endangered, threatened, and candidate species if all of the following conditions are met:

- The take is incidental to an otherwise lawful activity.
- The impacts of the authorized take are minimized and fully mitigated.
- Issuance of the permit will not jeopardize the continued existence of the species.
- The permit is consistent with any regulations adopted in accordance with §§ 2112 and 2114 (legislature-funded recovery strategy pilot programs in the affected area).
- The applicant ensures that adequate funding is provided for implementing mitigation measures and monitoring compliance with these measures and their effectiveness.

The CESA provides that if a person obtains an incidental take permit under specified provisions of the ESA for species also listed under the CESA, no further authorization is necessary under CESA if the federal permit satisfies all the requirements of CESA and the person follows specified steps (FGC § 2080.1).

4.1.4 California Fish and Game Code

The California Constitution establishes the California Fish and Game Commission (Commission) (CA Constitution Article 4, § 20). The California Fish and Game Code (FGC) delegates the power to the Commission to regulate the taking or possession of birds, mammals, fish, amphibian and reptiles (FGC § 200). The Commission has adopted regulations setting forth the manner and method of the take of certain fish and wildlife in the California Code of Regulations, Title 14.

4.1.5 California Fish and Game Code- Species Protection

The FGC establishes CDFW (FGC § 700) and states that the fish and wildlife resources of the state are held in trust for the people of the state by and through CDFW (FGC § 711.7(a)). All licenses, permits, tag reservations and other entitlements for the take of fish and game authorized by FGC are prepared and issued by CDFW (FGC § 1050 (a)).

Provisions of the FGC provide special protection to certain enumerated species such as:

§ 3503 protects eggs and nests of all birds.
§ 3503.5 protects birds of prey and their nests.
§ 3511 lists fully protected birds.
§ 3513 protects all birds covered under the federal Migratory Bird Treaty Act.
§ 3800 defines nongame birds.
§ 4150 defines nongame mammals.
§ 4700 lists fully protected mammals.
§ 5050 lists fully protected amphibians and reptiles.
§ 5515 lists fully protected fish species.

4.2 Special-Status Species Reviewed

For the purposes of this Biological Resources Assessment, special-status species include those that are federally listed as Endangered, Threatened or Proposed for federal listing (candidate) under the USFWS. Other species also evaluated in this Biological Assessment include non-listed federal and California Special Species of Concern (CSC) and those species that fall under the jurisdiction of the USFWS such as the Migratory Bird Treaty Act (MBTA) and the CDFW, such as CEQA Section 15380(d).

Impacts to special-status species were assessed if: (1) those species occurred in habitats similar to those of the project sites and buffer areas, and (2) were known to occur within the general vicinity of the proposed project sites.

Federally and State-Listed Plant Species. Review of the USFWS (USFWS 2019), the CNPS (CNPS 2019), and the CNDDB (CNDDB 2019) revealed that 36 listed plant species and species of concern have potential to occur in the general project area. Please refer to Table 1 for a list of these species and their habitat requirements. Potential habitat is present for 24 of these 36 plant species. Botanical surveys were conducted on May 1, May 30, and June 24, 2019. These surveys were conducted within the blooming period of all 24 of these special-status plant species.

Survey findings for the 24 targeted special-status plant species that had blooming periods during our surveys were negative. Therefore, no impacts to those species are expected due to project implementation.

Table 1
Special-Status Species Potentially Occurring in the Proposed Project Site and Buffer Area

Common Name	Scientific Name	Federal Status	State Status	Habitat/Observances	Potential to Occur on Project Site and Buffer Area
Birds					
Marbled murrelet	*Brachyramphus marmoratus*	FT	CE	Feed on fish and invertebrates in the nearshore marine environment, but fly up to 50 miles inland to nest in conifer forests. Murrelets utilize forests with mature- or old-growth characteristics, including large trees, a generous amount of canopy closure, and complex under- and overstory structure. Nest trees must have trunk or branch formations, such as large horizontal branches, that can serve as nest platforms.	**Potentially present.** This species may be present feeding in the general project buffer area, but is not likely to be found in the proposed project site. No nesting habitat observed in the general project area. No individuals of this species were observed during surveys. This species has not been documented within the boundaries of or in proximity to the proposed project site (CDFW 2019) (see Figure 3a).
Western snowy plover	*Charadrius alexandrinus nivosus*	FT	CSC	Sandy beaches, salt pond levees, and shores of large alkali lakes. Require sandy, gravelly or friable soils for nesting.	**None.** No potential habitat suitable for this species was observed within the proposed project site or buffer area.
Yellow-billed cuckoo	*Coccyzus americanus*	FT	CE	Riparian forest.	**None.** No potential habitat suitable for this species was observed within the proposed project site or buffer area.
Tufted puffin	*Fratercula cirrhata*	-	CSC	Ocean, nesting colonially in burrows on sea cliffs. Ranges widely at sea, from fairly near shore to far out of sight of land. Even during breeding season, may be at sea far from nesting colonies. Nests on islands, primarily on grassy steep slopes or cliff tops (steep dropoff may help birds take flight). Throughout range, prefers treeless islands. Audubon.org	**None.** No potential habitat suitable for this species was observed within the proposed project site or buffer area.
Northern spotted owl	*Strix occidentalis caurina*	FT	CT	Northern spotted owls are very territorial and intolerant of habitat disturbance. They prefer old-growth forests with tree canopies that are high and open enough for the owls to fly between and underneath the trees. Preferred areas have large trees with broken tops, deformed limbs or large	**None.** No potential habitat suitable for this species was observed within the proposed project site or buffer area.

Table 1
Special-Status Species Potentially Occurring in the Proposed Project Site and Buffer Area

Common Name	Scientific Name	Federal Status	State Status	Habitat/Observances	Potential to Occur on Project Site and Buffer Area
				holes used as nesting sites. Each pair needs a large amount of land for hunting and nesting, and although they do not migrate, spotted owls may shift their ranges in response to seasonal changes that make hunting difficult.	
Mammals					
Point Arena mountain beaver	*Aplodontia rufa nigra*	FE	CSC	Coastal areas of Point Arena with springs or seepages. Found on north-facing slopes of ridges and gullies with friable soils and thickets of undergrowth.	**None.** No potential habitat suitable for this species was observed within the proposed project site or buffer area.
Sonoma tree vole	*Arborimus pomo*	-	CSC	Found in North coast fog belt from Oregon border to Sonoma County. In Douglas-fir, redwood & montane hardwood-conifer forests. It Feeds almost exclusively on Douglas-fir needles, but will occasionally take needles of grand fir, hemlock or spruce.	**Potentially Present.** Potential habitat suitable for this species was observed within the proposed project site and buffer area. No sign of this species was observed during biological surveys nor were any roosting/maternity sites identified. This species has not been documented within the immediate vicinity of proposed project site (CDFW 2019) (see Figure 3a).
Townsend's big-eared bat	*Corynorhinus townsendii*	-	CSC	Throughout California in a wide variety of habitats. Most common in mesic sites. Roosts in the open, hanging from walls and ceilings. Roosting sites limiting. Extremely sensitive to human disturbance.	**Potentially Present.** Potential foraging habitat is present in the proposed project site and buffer area. Potential roosting habitat is present in the proposed project site and buffer area. No sign of this species was observed during biological surveys nor were any roosting/maternity sites identified. This species has been documented within the immediate vicinity of proposed project site (CDFW 2019) (see Figure 3a).
Amphibians and Reptiles					
Pacific tailed frog	*Ascaphus truei*	-	CSC	Occurs in montane hardwood-conifer, redwood, Douglas fir and Ponderosa pine habitats. Restricted	**None.** No potential habitat suitable for this species was observed within the proposed project site or buffer area.

Table 1
Special-Status Species Potentially Occurring in the Proposed Project Site and Buffer Area

Common Name	Scientific Name	Federal Status	State Status	Habitat/Observances	Potential to Occur on Project Site and Buffer Area
				to perennial montane streams. Tadpoles require water below 15 degrees Celsius.	
Green sea turtle	*Chelonia mydas*	FT	-	Found in fairly shallow waters (except when migrating) inside reefs, bays, and inlets. The turtles are attracted to lagoons and shoals with an abundance of marine grass and algae. Open beaches with a sloping platform and minimal disturbance are required for nesting.	**None.** No potential habitat suitable for this species was observed within the proposed project site or buffer area.
Leatherback sea turtle	*Dermochelys coriacea*	FE	-	Most pelagic [open ocean dwelling] of the sea turtles. Adult females require sandy nesting beaches backed with vegetation and sloped sufficiently so the distance to dry sand is limited. Their preferred beaches have proximity to deep water and generally rough seas.	**None.** No potential habitat suitable for this species was observed within the proposed project site or buffer area.
California giant salamander	*Dicamptodon ensatus*	-	CSC	The Pacific giant salamander is found in a variety of aquatic habitats, including lakes, ponds, rivers, and streams. They prefer fast moving water to slow moving water. Cover is another vital characteristic of this Salamander's habitat. Cover is used for hiding, protection from the sun, and brooding eggs.	**None.** No potential habitat suitable for this species was observed within the proposed project site or buffer area.
California red-legged frog	*Rana draytonii*	FT	CSC	Lowlands and foothills in or near permanent sources of deep water with dense, shrubby or emergent riparian vegetation. Requires 11 to 20 weeks of permanent water for larval development. Must have access to aestivation habitat, consisting of small mammal burrows and moist leaf litter.	**None.** No potential habitat suitable for this species was observed within the proposed project site or buffer area.
Foothill yellow-legged frog	*Rana boylii*	-	CSC	Partly-shaded, shallow streams and riffles with a rocky substrate in a variety of habitats. Need at least some cobble-sized substrate for egg-laying. Require at least 15 weeks to attain metamorphosis.	**None.** No potential habitat suitable for this species was observed within the proposed project site or buffer area.
Red-bellied newt	*Taricha rivularis*	-	CSC	Adults migrate from terrestrial to aquatic habitats seasonally for breeding. There are no detailed descriptions of terrestrial habitats, and what information is available is somewhat inconsistent	**None.** No potential habitat suitable for this species was observed within the proposed project site or buffer area. No

Table 1
Special-Status Species Potentially Occurring in the Proposed Project Site and Buffer Area

Common Name	Scientific Name	Federal Status	State Status	Habitat/Observances	Potential to Occur on Project Site and Buffer Area
				between sources. Several sources state that this species' range is confined to the coast redwood belt, but Riemer (1958) notes that red-bellied newts are not restricted to redwood forests, nor are they particularly abundant in that habitat. However, none of these authors specifically describe the terrestrial habitat for this species. Twitty (1966) comments that California laurel (*Umbellularia californica*) trees are common near his study site at Pepperwood Creek, but no other tree species are mentioned. Petranka (1998) states that red-bellied newts are found predominantly in redwood forests. I (S.B.M.) have observed terrestrial adults in forest dominated by Douglas-fir (*Pseudotsuga menziesii*), tan oak (*Lithocarpus densiflorus*), and madrone (*Arbutus menziesii*) in southern Humboldt County, and colleagues have seen them within redwood forest in Mendocino County (S. Sillett and J. Spickler, personal communication). Clearly, multiple forest types are used by this species. Adults use terrestrial sites for underground retreats during the dry season (May–October) and for foraging and migration prior to winter breeding. Both Twitty (1966) and Licht and Brown (1967) mentioned that red-bellied newts at their study sites (Pepperwood Creek and Skaggs Springs, respectively, both in Sonoma County) were found on steep, heavily wooded slopes that rise from the south bank of the breeding stream (i.e., north-facing slopes). Packer (1960) noted that at Pepperwood Creek, the banks and north-facing slopes are littered with many fallen trees and branches that provide cover for red-bellied newts and other amphibians. Aquatic habitats include streams and rivers; red-bellied newts apparently do	aquatic breeding habitat observed during biological surveys.

Table 1
Special-Status Species Potentially Occurring in the Proposed Project Site and Buffer Area

Common Name	Scientific Name	Federal Status	State Status	Habitat/Observances	Potential to Occur on Project Site and Buffer Area
				not use ponds or other standing water habitats for breeding (Riemer, 1958; Stebbins, 1985; Petranka, 1998). Males tend to enter the streams before females and therefore spend more time in the aquatic habitat (Twitty, 1942, 1955; Packer, 1963). Males also tend to breed more frequently than females; males breed usually every 1–2 years, whereas females usually breed only ≥ 2 years. Consequently, females may spend several years on land before entering the water again for breeding.	
Fish					
Gualala roach	*Lavinia symmetricis parvipinnis*	-	CSC	Clear Lake roach occupy diverse stream habitats, from cool headwater reaches to warm, low-elevation mainstem reaches. They are most abundant in warm, exposed, mid to low-elevation stream reaches where they prefer quiet water, especially pools. In the Clear Lake basin, roach abundance is positively correlated with stream temperature, conductivity, gradient, coarse substrates and bedrock, and negatively correlated with depth, cover, canopy (shade), and fast water.	**No Potential.** No potential habitat suitable for this species was observed within the proposed project site or buffer area.
Coho salmon, Central California Coast Population	*Oncorhynchus kisutch*	FE	CE	Occupy coastal drainages. Coho have an anadromous life cycle. They hatch in freshwater streams, migrate to live for two years in the ocean, and then return to breed, or spawn, in freshwater, almost always returning to the same river in which they were born. Returning adults typically enter freshwater rivers in the late fall, and spawning occurs throughout the fall and winter. Eggs hatch in the early spring, and juveniles then live in the river-bottom gravel for 10 weeks before emerging. After maturing for about a year in freshwater, coho migrate downstream to coastal estuaries and enter the ocean in the spring.	**No Potential.** No potential habitat suitable for this species was observed within the proposed project site or buffer area.

Table 1
Special-Status Species Potentially Occurring in the Proposed Project Site and Buffer Area

Common Name	Scientific Name	Federal Status	State Status	Habitat/Observances	Potential to Occur on Project Site and Buffer Area
Tidewater goby	*Eucyclogobius newberryi*	FE	-	Brackish water habitats along the California coast from Agua Hedionda Lagoon, San Diego County to the mouth of the Smith River. Found in shallow lagoons and lower stream reaches. Require fairly still but not stagnant water and high oxygen levels.	**None.** No potential habitat suitable for this species was observed within the proposed project site or buffer area.
Steelhead – Northern California DPS	*Onocorhynchus mykiss irideus population 16*	FT	-	After maturing for 1 to 3 years in the ocean, adult steelhead typically begin their spawning migration into the Sacramento and San Joaquin Delta System in fall and winter. Adult steelhead enter the mainstream Sacramento River in July, peak in abundance in the fall, and continue migrating through February and March. Juvenile steelhead will remain in fresh water and continue to rear for 1 to 3 years before migrating to the ocean in November through May to mature. Smolt typically migrate to the ocean during March through June.	**None.** No potential habitat suitable for this species was observed within the proposed project site or buffer area.
Insects					
Lotis blue butterfly	*Lycaeides argyrognomon lotis*	FE	-	This species has a single generation per year, with a relatively long adult flight period, extending from mid-April to early July. Eggs are likely laid during the adult flight season. Newly hatched larvae begin to feed immediately, then overwinter in dormancy (diapause) as small larvae, then resume feeding the next spring. The larvae (caterpillars) probably feed for about 4-6 weeks in the spring before pupating. Lotis blue larvae have apparently not been observed; therefore we do not know what plants the larvae require for food. Based on closely related species, native plants in the pea family (Fabaceae) are likely candidates. The coast trefoil (also known as seaside bird's-foot trefoil) (*Lotus formosissimus*) is thought to be a larval food plant. The coast trefoil is a small perennial plant that generally occurs in damp areas in meadows, roadside ditches, and forest edges	**None.** No potential habitat suitable for this species was observed within the proposed project site or buffer area.

Table 1
Special-Status Species Potentially Occurring in the Proposed Project Site and Buffer Area

Common Name	Scientific Name	Federal Status	State Status	Habitat/Observances	Potential to Occur on Project Site and Buffer Area
				and clearings. This plant grew at the last known lotis blue site, and there is a report of a lotis blue butterfly showing egg-laying behavior on coast trefoil, although no egg was observed. Other possible food plants include herbaceous species of lupine.	
Behren's silverspot butterfly	*Speyeria zerene behrensii*	FE	-	Inhabits coastal terrace prairie habitat Food plant is *Viola spp.*	**None.** No potential habitat suitable for this species was observed within the proposed project site or buffer area.
California freshwater shrimp	*Syncaris pacifica*	FE	-	Habitat conditions include streams of 30 to 91 cm (12 to 36) inches in depth with exposed live roots of trees such as alder and willow along undercut banks greater than 15 cm (6 inches). The banks have overhanging woody debris or stream vegetation and vines such as stinging nettles, grasses, vine maple and mint.	**None.** No potential habitat suitable for this species was observed within the proposed project site or buffer area.
Plants					
Blasdlae's bent grass	*Agrostis blasdalei*	-	List 1B.2	Coastal bluff scrub, coastal dunes, and coastal prairie. Blooms May to July. Elevation: 5-365 m.	**None.** No habitat in project area.
Humboldt County milk-vetch	*Astragalus agnicidus*	-	CE,List 1B.1	Broadleafed upland forest and north coast coniferous forest. Blooms April to September. Elevation: 120-800 m.	**Potentially present.** Potential habitat for this species occurs within the proposed project site and buffer area. No individuals of this species were observed during surveys. This species has not been documented within the boundaries of or in proximity to the proposed project site (CDFW 2019) (see Figure 3b).
Rattan's milk-vetch	*Astragalus rattanii var. rattanii*	-	List 4.3	Chaparral, cismontane woodland, and lower montane coniferous forest. Blooms April to July. Elevation: 30-825 m.	**Potentially present.** Potential habitat for this species occurs within the proposed project site and buffer area. No individuals of this species were observed during surveys. This species has not been documented within the boundaries of or in proximity to the proposed project site

Table 1
Special-Status Species Potentially Occurring in the Proposed Project Site and Buffer Area

Common Name	Scientific Name	Federal Status	State Status	Habitat/Observances	Potential to Occur on Project Site and Buffer Area
					(CDFW 2019) (see Figure 3b).
Bolander's reed grass	*Calamagrostis bolanderi*	-	List 4.2	Coastal scrub, bogs, fens, broadleafed upland forest, closed cone coniferous forest, meadows, seeps, freshwater marsh and swamps, and north coast coniferous forest. Blooms May to August. Elevation: 0-455 m.	**Potentially present.** Potential habitat for this species occurs within the proposed project site and buffer area. No individuals of this species were observed during surveys. This species has not been documented within the boundaries of or in proximity to the proposed project site (CDFW 2019) (see Figure 3b).
Coastal bluff morning-glory	*Calystegia purpurata ssp. saxicola*	-	List 1B.2	Coastal dunes, coastal scrub, coastal bluff scrub, and north coast coniferous forest. Blooms April to September. Elevation: 4-165 m.	**Potentially present.** Potential habitat for this species occurs within the proposed project site and buffer area. No individuals of this species were observed during surveys. This species has not been documented within the boundaries of or in proximity to the proposed project site (CDFW 2019) (see Figure 3b).
Swamp harebell	*Campanula californica*	-	List 1B.2	Bogs and fens, closed-cone coniferous forest, coastal prairie, meadows and seeps, freshwater marsh, and north coast coniferous forest. Blooms June to October. Elevation: 1-520 m.	**Potentially present.** Potential habitat for this species occurs within the proposed project site and buffer area. No individuals of this species were observed during surveys. This species has not been documented within the boundaries of or in proximity to the proposed project site (CDFW 2019) (see Figure 3b).
California sedge	*Carex californica*	-	List 2B.3	Bogs, fens, closed-cone coniferous forest, coastal prairie, meadows, seeps, marshes, and swamps. Blooms May to August. Elevation: 90-335 m.	**Potentially present.** Potential habitat for this species occurs within the proposed project site and buffer area. No individuals of this species were observed during surveys. This species has not been documented within the boundaries of or in proximity to the proposed project site (CDFW 2019) (see Figure 3b).

Table 1
Special-Status Species Potentially Occurring in the Proposed Project Site and Buffer Area

Common Name	Scientific Name	Federal Status	State Status	Habitat/Observances	Potential to Occur on Project Site and Buffer Area
Johnny-nip	*Castilleja ambigua var. ambigua*	-	List 4.2	Coastal bluff scrub, coastal prairie, coastal scrub, marshes, swamps, vernal pools, and valley and foothill grasslands. Blooms March to July. Elevation: 0-435 m.	**Potentially present.** Potential habitat for this species occurs within the proposed project site and buffer area. No individuals of this species were observed during surveys. This species has not been documented within the boundaries of or in proximity to the proposed project site (CDFW 2019) (see Figure 3b).
Mendocino Coast paintbrush	*Castilleja mendocinensis*	-	List 1B.2	Coastal bluff scrub, closed-cone coniferous forest, coastal prairie, coastal dunes, and coastal scrub. Blooms April to August. Elevation: 0-160 m.	**Potentially present.** Potential habitat for this species occurs within the proposed project site and buffer area. No individuals of this species were observed during surveys. This species has not been documented within the boundaries of or in proximity to the proposed project site (CDFW 2019) (see Figure 3b).
Glory brush	*Ceanothus gloriosus var. exaltatus*	-	List 4.3	Chaparral. Blooms March to June. Elevation: 30-610 m.	**None.** No habitat in project area.
Point Reyes Ceanothus	*Ceanothus gloriosus var. gloriosus*	-	List 4.3	Coastal bluff scrub, closed-cone coniferous forest, coastal dunes, and coastal scrub. Blooms March to May. Elevation: 5-520 m.	**Potentially present.** Potential habitat for this species occurs within the proposed project site and buffer area. No individuals of this species were observed during surveys. This species has not been documented within the boundaries of or in proximity to the proposed project site (CDFW 2019) (see Figure 3b).
Mendocino dodder	*Cuscuta pacifica var. papillata*	-	List 1B.2	Coastal dunes. Blooms June to October. Elevation: 0-50 m.	**None.** No habitat in project area.
Streamside daisy	*Erigeron biolettii*	-	List 3	Broadleafed upland forest, cismontane woodland, and north coast coniferous forest. Blooms June to October. Elevation: 30-1,100 m.	**Potentially present.** Potential habitat for this species occurs within the proposed project site and buffer area. No individuals of this species were observed during surveys. This species has not been documented within the boundaries of or

Table 1
Special-Status Species Potentially Occurring in the Proposed Project Site and Buffer Area

Common Name	Scientific Name	Federal Status	State Status	Habitat/Observances	Potential to Occur on Project Site and Buffer Area
					in proximity to the proposed project site (CDFW 2019) (see Figure 3b).
Supple daisy	*Erigeron supplex*	-	List 1B.2	Coastal bluff scrub and coastal prairie. Blooms May to July. Elevation: 5-185 m.	**None.** No habitat in project area.
Bluff wallflower	*Erysimum concinnum*	-	List 1B.2	Coastal bluff scrub, coastal dunes, and coastal prairie. Blooms February to July. Elevation: 0-185 m.	**None.** No habitat in project area.
Roderick's fritillary	*Fritillaria roderickii*	-	CE,List 1B.1	Coastal bluff scrub, coastal prairie, and valley and foothill grassland. Blooms March to May. Elevation: 15-610 m.	**None.** No habitat in project area.
Pacific gilia	*Gilia capitata ssp. pacifica*	-	List 1B.2	Coastal bluff scrub, chaparral, coastal prairie, and valley and foothill grassland. Blooms April to August. Elevation: 5-1,345 m.	**None.** No habitat in project area.
Short-leaved evax	*Hesperevax sparsiflora var. brevifolia*	-	List 1B.2	Coastal bluff scrub, coastal dunes, and coastal prairie. Blooms March to June. Elevation: 0-640 m.	**None.** No habitat in project area.
Pygmy cypress	*Hesperocyparis pygmaea*	-	List 1B.2	Closed-cone coniferous forest. Blooming period: None. Elevation: 30-600 m.	**Potentially present.** Potential habitat for this species occurs within the proposed project site and buffer area. No individuals of this species were observed during surveys. This species has not been documented within the boundaries of or in proximity to the proposed project site (CDFW 2019) (see Figure 3b).
Point Reyes horkelia	*Horkelia marinensis*	-	List 1B.2	Coastal dunes, coastal prairie, and coastal scrub. Blooms May to September. Elevation: 5-755 m.	**None.** No habitat in project area.
Thin-lobed horkelia	*Horkelia tenuiloba*	-	List 1B.2	Broadleafed upland forest, chaparral, and valley and foothill grassland. Blooms May to July. Elevation: 50-500 m.	**Potentially present.** Potential habitat for this species occurs within the proposed project site and buffer area. No individuals of this species were observed during surveys. This species has not been documented within the boundaries of or in proximity to the proposed project site (CDFW 2019) (see Figure 3b).

Table 1
Special-Status Species Potentially Occurring in the Proposed Project Site and Buffer Area

Common Name	Scientific Name	Federal Status	State Status	Habitat/Observances	Potential to Occur on Project Site and Buffer Area
Harlequin lotus	*Hosackia gracilis*	-	List 4.2	Broadleafed upland forest, coastal bluff scrub, closed-cone coniferous forest, cismontane woodland, coastal prairie, coastal scrub, meadows, seeps, marshes, swamps, north coast coniferous forest, and valley and foothill grassland. Blooms March to July. Elevation: 0-700 m.	**Potentially present.** Potential habitat for this species occurs within the proposed project site and buffer area. No individuals of this species were observed during surveys. This species has not been documented within the boundaries of or in proximity to the proposed project site (CDFW 2019) (see Figure 3b).
Small groundcone	*Kopsiopsis hookeri*	-	List 2B.3	North coast coniferous forest. Blooms April to August. Elevation: 90-885 m.	**Potentially present.** Potential habitat for this species occurs within the proposed project site and buffer area. No individuals of this species were observed during surveys. This species has not been documented within the boundaries of or in proximity to the proposed project site (CDFW 2019) (see Figure 3b).
Burke's goldfields	*Lasthenia burkei*	FE	CE, List 1B.1	Vernal pools, meadows, and seeps. Blooms April to June. Elevation: 15-600 m.	**None.** No habitat in project area.
Baker's goldfields	*Lasthenia californica ssp. bakeri*	-	List 1B.2	Closed-cone coniferous forest, coastal scrub, meadows and seeps, and marshes and swamps. Blooms April to October. Elevation: 60-520 m.	**Potentially present.** Potential habitat for this species occurs within the proposed project site and buffer area. No individuals of this species were observed during surveys. This species has not been documented within the boundaries of or in proximity to the proposed project site (CDFW 2019) (see Figure 3b).
Perennial goldfields	*Lasthenia californica ssp. macrantha*	-	List 1B.2	Coastal bluff scrub, coastal dunes, and coastal scrub. Blooms January to November. Elevation: 5-185 m.	**None.** No habitat in project area.
Contra Costa goldfields	*Lasthenia conjugens*	FE	List 1B.1	Valley and foothill grassland, vernal pools, alkaline playas, and cismontane woodland. Blooms March to June. Elevation: 1-450 m.	**Potentially present.** Potential habitat for this species occurs within the proposed project site and buffer area. No individuals of this species were observed during surveys. This species has not been documented within the boundaries of or

Table 1
Special-Status Species Potentially Occurring in the Proposed Project Site and Buffer Area

Common Name	Scientific Name	Federal Status	State Status	Habitat/Observances	Potential to Occur on Project Site and Buffer Area
					in proximity to the proposed project site (CDFW 2019) (see Figure 3b).
Marsh pea	*Lathyrus palustris*	-	List 2B.2	Mesic, bogs and fens, coastal prairie, coastal scrub, lower montane coniferous forest, marshes and swamps, North Coast coniferous forest. Blooms March to August. Elevation: 1-100 m.	**Potentially present.** Potential habitat for this species occurs within the proposed project site and buffer area. No individuals of this species were observed during surveys. This species has not been documented within the boundaries of or in proximity to the proposed project site (CDFW 2019) (see Figure 3b).
Coast lily	*Lilium maritimum*	-	List 1B.1	Closed-cone coniferous forest, coastal prairie, coastal scrub, broadleafed upland forest, north coast coniferous forest, marshes, and swamps. Blooms May to August. Elevation: 4-475 m.	**Potentially present.** Potential habitat for this species occurs within the proposed project site and buffer area. No individuals of this species were observed during surveys. This species has been documented within the general proximity of the proposed project site (CDFW 2019) (see Figure 3b).
Running-pine	*Lycopodium clavatum*	-	List 4.1	Often edges, openings and roadsides, lower montane forest (mesic), marshes and swamps, North Coast coniferous forest (mesic). Blooms June to September. Elevation 45-1225 m.	**Potentially present.** Potential habitat for this species occurs within the proposed project site and buffer area. No individuals of this species were observed during surveys. This species has not been documented within the boundaries of or in proximity to the proposed project site (CDFW 2019) (see Figure 3b).
White-flowered rein orchid	*Piperia candida*	-	List 1B.2	North coast coniferous forest, lower montane coniferous forest, and broadleaved upland forest. Elevational range: 0 to 1,200 meters. Blooming period: March through September.	**Potentially present.** Potential habitat for this species occurs within the proposed project site and buffer area. No individuals of this species were observed during surveys. This species has not been documented within the boundaries of or in proximity to the proposed project site (CDFW 2019) (see Figure 3b).

Table 1
Special-Status Species Potentially Occurring in the Proposed Project Site and Buffer Area

Common Name	Scientific Name	Federal Status	State Status	Habitat/Observances	Potential to Occur on Project Site and Buffer Area
Maple-leaved checkerbloom	*Sidalcea malachroides*	-	List 4.2	Broad-leaved upland forest, coastal prairie, coastal scrub, north coast coniferous forest, and riparian forest. Blooms March to August. Elevation: 0 – 730 m.	**Potentially present.** Potential habitat for this species occurs within the proposed project site and buffer area. No individuals of this species were observed during surveys. This species has not been documented within the boundaries of or in proximity to the proposed project site (CDFW 2019) (see Figure 3b).
Purple-stemmed checkerbloom	*Sidalcea malviflora ssp. purpurea*	-	List 1B.2	Broad-leaved upland forest and coastal prairie. Blooms May to June. Elevation: 15 – 85 m.	**Potentially present.** Potential habitat for this species occurs within the proposed project site and buffer area. No individuals of this species were observed during surveys. This species has not been documented within the boundaries of or in proximity to the proposed project site (CDFW 2019) (see Figure 3b).
Showy Indian clover	*Trifolium amoenum*	FE	List 1B.1	Coastal bluff scrub, valley and foothill grassland. Blooms April to June. Elevation: 5-415 m.	**None.** No habitat in project area.
Santa Cruz clover	*Trifolium buckwestiorum*	-	List 1B.1	Found in broadleafed upland forest, cismontane woodland, and coastal prairie. Elevational range: 105 to 610 meters. Blooming period: April through October.	**Potentially present.** Potential habitat for this species occurs within the proposed project site and buffer area. No individuals of this species were observed during surveys. This species has not been documented within the boundaries of or in proximity to the proposed project site (CDFW 2019) (see Figure 3b).

Table 1
Special-Status Species Potentially Occurring in the Proposed Project Site and Buffer Area

Common Name	Scientific Name	Federal Status	State Status	Habitat/Observances	Potential to Occur on Project Site and Buffer Area
Fringed false-hellebore	*Veratrum fimbriatum* Gray	-	List 4.3	Bogs, fens, coastal scrub, meadows, seeps, and north coast coniferous forest. Blooms July to September. Elevation: 3-300 m.	**Potentially present.** Potential habitat for this species occurs within the proposed project site and buffer area. No individuals of this species were observed during surveys. This species has not been documented within the boundaries of or in proximity to the proposed project site (CDFW 2019) (see Figure 3b).
Sensitive Vegetative Communities					
Northern Coastal Bluff Scrub (Not present in project site or buffer area)					
Coastal Terrace Prairie (Not present in project site or buffer area)					
Northern Coastal Salt Marsh (Not present in project site or buffer area)					
Coastal Brackish Marsh (Not present in project site or buffer area)					
Coastal and Valley Freshwater Marsh (Present in project buffer area)					

Status Codes:

Federal
FE = Federally listed as Endangered
FT = Federally listed as Threatened
FC = Federal Candidate species

State
CE = California listed as Endangered
CT = California listed as Threatened
CR = California listed as Rare
CFP = California Fully Protected
CSC = Species of Special Concern
WL = CDFW Watch List

California Rare Plant Rank (formerly known as CNPS Lists)
California Rare Plant Rank 1A = Plants presumed extinct in California
California Rare Plant Rank 1B = Plants rare, threatened, or endangered in California and elsewhere
California Rare Plant Rank 2A = Plants presumed extirpated from California, but more common elsewhere
California Rare Plant Rank 2B = Plants rare or endangered in California, but more common elsewhere
California Rare Plant Rank 3 = Plants about which we need more information; a review list
California Rare Plant Rank 4 = Plants of limited distribution; a watch list.
California Rare Plant Rank Rarity Status of .1 = Seriously endangered in California

Table 1
Special-Status Species Potentially Occurring in the Proposed Project Site and Buffer Area

Common Name	Scientific Name	Federal Status	State Status	Habitat/Observances	Potential to Occur on Project Site and Buffer Area

California Rare Plant Rank Rarity Status of .2 = Fairly endangered in California

Status, distribution, and habitat information from the California Department of Fish and Wildlife (CDFW) California Natural Diversity Database RareFind 5 (CDFW 2019); California Native Plant Society, California Rare Plant Electronic Inventory (CNPS 2019); and USFWS Online Endangered Species Database (USFWS 2019).

4.3 SPECIAL-STATUS WILDLIFE SPECIES

The following is a discussion of species having potential to occur on site and/or are species that are prominent in today's regulatory environment. This document does not address impacts to species that may occur in the region but for which no habitat occurs on site. Species-specific information described below is primarily from USFWS 2019 and CDFW 2019, unless otherwise noted.

Marbled Murrelet - The marbled murrelet is a Federally Threatened and California Endangered bird species. The marbled murrelet is a small (25 cm), chunky auk with a slender black bill. It has pointed wings and plumage that varies by season. The non-breeding plumage is typically white underneath with a black crown, nape, wings and back. The bird closely resembles its closest relative, the Long-billed murrelet. In breeding plumage, both have a brown mottled body and face. The Long-billed has a pale white throat, lacking in the Marbled. In winter plumage, the Marbled murrelet has a white neck collar, absent in Long-billed. The Marbled murrelet is shorter-billed and slightly smaller than the Long-billed murrelet.

The marbled murrelet feeds at sea both in pelagic offshore areas (often associating with upwellings) and inshore in protected bays and fiords. Marbled murrelets feed below the water surface on small fish and invertebrates. Some principal foods include sand lance (*Ammodytes hexapterus*), Pacific herring (*Clupea haringus*), capelin (*Mallotus villosus*), shiner perch, and the invertebrates *Euphausia pacifica* and *Thysanoessa spinifera*. Marbled murrelets often forage in pairs but do not feed in large flocks as do other alcids. Loose aggregations of 500 or more birds occasionally occur in winter. Subadults feed singly; but in early July, when pairs of adults are still feeding young, mixed flocks begin to form. Marbled murrelets feed during the day and at night.

The nesting behavior of the marbled murrelet is unusual, since unlike most alcids it does not nest in colonies on cliffs or in burrows, but on branches of old-growth and mature conifers such as western hemlock, Sitka spruce, Douglas-fir and coastal redwood, as far as 80 km inland. It lays one egg on a platform of lichen or moss on these branches (less often on the ground). In northern populations, murrelets nest on the ground among rocks, as do other related murrelet species. The egg is incubated for a month, then fed for around 40 days until the chick is able to fledge. Adults fly from ocean feeding areas to inland nest sites, mostly at dusk and dawn. They feed nestlings at least once and sometimes twice per day or night. Usually only one fish is carried to the young. The chick then leaves the nest and flies unaccompanied to the sea. Breeding success is low and chick mortality high.

Marbled murrelets do not breed until they are at least 2 years old. Marbled murrelets nest from mid-April to late September. Peak activity occurs from mid-June to late July in California, and the second week of July to mid-August in Oregon. Marbled murrelet are semicolonial in nesting habits. Two nests found in Washington were located only 150 feet (46 m) apart. Not all mature adults nest every year. Marbled murrelets lay only one egg. Nestlings fledge in 28 days. Young marbled murrelets remain in the nest longer than other alcids and molt into their juvenile plumage before leaving the nest. Fledglings fly directly from the nest to the ocean.

Marbled murrelets occur in summer from Alaska's Kenai Peninsula, Barren islands, and Aleutian Islands south along the coast of North America to Point Sal, Santa Barbara County, in south-central California. Marbled murrelets winter mostly within the same general area, except that they tend to vacate the most northern sections of their range, especially where ice forms on the surface of the fiords. They have been recorded as far south as Imperial Beach of San Diego County, California.

Marbled murrelets are coastal birds that occur mainly near saltwater within 1.2 miles (2 km) of shore. However, marbled murrelets have been found up to 59 miles (95 km) inland in Washington, 35 miles (56 km) inland in Oregon, 22 miles (37 km) inland in northern California, and 11 miles (18 km) inland in central California. Over 90% of all marbled murrelet observations in the northern Washington Cascades were within 37 miles (60 km) of the coast. Many marbled murrelets regularly visit coastal lakes. Most lakes used by marbled murrelets are within 12 miles (20 km) of the ocean, but a few birds have been found at lakes as far inland as 47 miles (75 km). All lakes used by marbled murrelets occur within potential nesting habitat.

From southeast Alaska southward, marbled murrelets use mature or old-growth forest stands near the coastline for nesting. These forests are generally characterized by large trees (>32 inches [80 cm] diameter at breast height), a multistoried canopy, moderate to high canopy closure or an open crown canopy, large snags, and numerous downed snags in all stages of decay. Marbled murrelets tend to nest in the oldest trees in the stand. In Oregon, forests begin to exhibit old-growth characteristics at about 175 to 250 years of age. Moss, on which marbled murrelets nest, forms on the limbs of Douglas-fir that are more than 150 years old.

This species may be present transiting through the general project buffer area, but is not likely to be found nesting in the proposed project site. No suitable foraging and low quality nesting habitat was observed in the general project area, including the project buffer area. No individuals of this species were observed during surveys. This species has not been documented within the boundaries of or in proximity to the proposed project site (CDFW 2019) (see Figure 3a). Therefore, it is highly unlikely this species will be impacted by proposed project activities.

Sonoma Tree Vole - The Sonoma tree vole is endemic to California; it is a red, furry nocturnal vole up to 8 inches long. They breed year-round, with gestation typically lasting 4-6 weeks, litter size of two and weaned for another 4-6 weeks. This vole prefers moist, mature or old-growth Douglas-fir or mixed conifer forests with high canopy cover, high density of stumps and low density of snags, but it can use younger forests. It adopts old bird nests, 2-50 meters up in trees (mostly Douglas-fir), and is arboreal with some activity on the forest floor. It mostly eats the needles and inner twig bark of Douglas-fir trees, but also feeds on other firs, Sitka spruce and western hemlock.

Potential habitat suitable for this species was observed within the proposed project site and buffer area. No sign of this species was observed during biological surveys nor were any maternity sites identified. This species has not been documented within the project site or general vicinity

by CNDDB (CDFW 2019) (see Figure 3a).

Townsend's Big-Eared Bat - Townsend's big-eared bat is found throughout California, but the details of its distribution are not well known. This species is found in all but subalpine and alpine habitats, and may be found at any season throughout its range. Once considered common, Townsend's big-eared bat now is considered uncommon in California. It is most abundant in mesic habitats. This species requires caves, mines, tunnels, buildings, or other human-made structures for roosting. They may use separate sites for night, day, hibernation, or maternity roosts. Hibernation sites are cold, but not below freezing. Individuals may move within the hibernaculum to find suitable temperatures. Maternity roosts are warm. Roosting sites are the most important limiting resource. This species feeds on small moths. Beetles and a variety of soft-bodied insects also are taken. This species mates from November-February, but many females are inseminated before hibernation begins. Sperm is stored until ovulation occurs in spring. Gestation lasts 56 to 100 days, depending on temperature, size of the hibernating cluster, and time in hibernation. Births occur in May and June, peaking in late May. A single litter of 1 is produced annually. Young are weaned in 6 weeks and fly in 2.5 to 3 weeks after birth. Growth rate depends on temperature. The maternity group begins to break up in August. Females mate in their first autumn, males in their first or second autumn. About half of young females return to their birth site after their first hibernation.

This species may forage intermittently within the project site and buffer area. Potential roosting habitat was observed within areas of the project buffer (numerous trees). No individual Townsend's big-eared bats or any nesting/maternity sites were observed in the proposed project site or buffer area during surveys. This species has been documented as occurring in the immediate project area by CNDDB (see Figure 3a) (CDFW 2019).

4.4 CRITICAL HABITAT

No Federal critical habitat was identified within the proposed project site and buffer area (USFWS 2019).

4.5 SPECIAL STATUS NATURAL COMMUNITIES

Coastal and Valley Freshwater Marsh (a sensitive vegetation community as designated by the CNDDB) was observed within the buffer area of the existing access road to the proposed project site.

5.0 Impacts Analysis and Standard Construction Conditions

This section summarizes the potential biological impacts from implementation of the proposed project. The analysis of these effects is based on a reconnaissance-level biological survey of the project site and buffer area, a review of existing databases and literature, and personal professional experience with biological resources of the region. Potential effects to federally- and state-listed special-status animal species may occur from the proposed project. Standard Construction Conditions for these biological impacts are provided below. A synopsis of the species potentially affected is presented in Table 2, and is followed by Standard Construction Conditions to avoid "take" of individuals.

Table 2: Special Status Animal Species Potentially Affected by the Proposed Project

Species	Status (Federal/State)	Habitat Present/ Absent	Avoidance Yes/No
Marbled murrelet	FT/CE	Present	Yes
Sonoma tree vole	-/CSC	Present	Yes
Townsend's big-eared bat	-/CSC	Present	Yes

Potential Impacts to Common Wildlife and Plant Populations from Project Activities

Direct mortality or injury to common wildlife and plant populations could occur during ground disturbance activities associated with implementation of the project. Small vertebrate, invertebrate, and plant species are particularly prone to impact during project implementation because they are much less to non-mobile, and cannot easily move out of the path of project activities. Other more mobile wildlife species, such as most birds and larger mammals, can avoid project-related activities by moving to other adjacent areas temporarily. Increased human activity and vehicle traffic in the vicinity may disturb some wildlife species. Because common wildlife species found in the project area are locally and regionally common, potential impacts to these resources are considered less than significant. Therefore, no avoidance or minimization measures are proposed at this time.

Potential Impacts to Nesting Special-Status Avian Species from Project Activities

Implementation of the proposed project could potentially impact individual, foraging, and nesting migratory birds, raptor species, marbled murrelet, osprey, and northern spotted owl should they become established within the proposed project site or buffer area prior to project implementation. Impacts to these species could occur through crushing by construction equipment during implementation of project activities. Actively nesting birds could also be affected due to noise and vibration from project activities, if nests are located close enough to project activities. Project related noise and vibration could cause the abandonment of active nest sites. Impacts to these species would be considered significant. In the event that nesting birds

become established in the proposed project site or buffer area, the following Standard Construction Conditions measures will be implemented.

If ground disturbing activities occur during the breeding season of migratory avian, raptor species, and marbled murrelet (February through mid-September), surveys for active nests will be conducted by a qualified biologist no more than 10 days prior to start of activities. Pre-construction nesting surveys shall be conducted for nesting migratory avian and raptor species in the project site and buffer area. Pre-construction biological surveys shall occur prior to the proposed project implementation, and during the appropriate survey periods for nesting activities for individual avian species. Surveys will follow required CDFW and USFWS protocols, where applicable. A qualified biologist will survey suitable habitat for the presence of these species. If a migratory avian or raptor species is observed and suspected to be nesting, a buffer area will be established to avoid impacts to the active nest site. Identified nests should be continuously surveyed for the first 24 hours prior to any construction-related activities to establish a behavioral baseline. If no nesting avian species are found, project activities may proceed and no further Standard Construction Conditions measures will be required. If active nesting sites are found, the following exclusion buffers will be established, and no project activities will occur within these buffer zones until young birds have fledged and are no longer reliant upon the nest or parental care for survival.

- Minimum no disturbance of 250 feet around active nest of non-listed bird species and 250 foot no disturbance buffer around migratory birds;
- Minimum no disturbance of 500 feet around active nest of non-listed raptor species;
- and 0.5-mile no disturbance buffer from listed species and fully protected species until breeding season has ended or until a qualified biologist has determined that the birds have fledged and are no longer reliant upon the nest or parental care for survival.
- Once work commences, all nests should be continuously monitored to detect any behavioral changes as a result of project activities. If behavioral changes are observed, the work causing that change should cease and the appropriate regulatory agencies (i.e. CDFW, USFWS, etc.) shall be consulted for additional avoidance and minimization measures.
- A variance from these no disturbance buffers may be implemented when there is compelling biological or ecological reason to do so, such as when the project area would be concealed from a nest site by topography. Any variance from these buffers is advised to be supported by a qualified wildlife biologist and is recommended that CDFW and USFWS be notified in advance of implementation of a no disturbance buffer variance.

Potential Impacts to Sonoma Tree Vole from Project Activities

Implementation of the proposed project could result in potentially significant impacts on Sonoma tree vole and their habitat during proposed project activities. This species has the potential to

occur in the proposed project site. These impacts could result in direct mortality to individuals or small populations of these species, disturb breeding and foraging activities, and disturb potential habitat. These potential impacts will be avoided or reduced to a less-than-significant level through the implementation of the following measures:

- Telespan Communications shall retain a qualified biologist to conduct pre-activity surveys will be conducted for Sonoma tree vole in the proposed disturbance zone prior to any ground disturbing activities.
- If an active Sonoma tree vole nest is identified, a 330-foot buffer area will be established around the nest site to avoid or minimize impacts on the nest. Telespan Communications will consult with the appropriate regulatory agencies on how to protect this individual population of the species. If no active Sonoma tree vole nests are found, project activities may proceed and no further mitigation measures will be required.

Potential Impacts to Townsend's Big-Eared Bat from Project Activities

Implementation of the proposed project has the potential to impact Townsend's big-eared bat maternity sites if these species are present in the project site or buffer area during implementation of the project activities if they have established maternity or roosting sites in in trees, or in other potential maternity, roosting, or hibernation sites. Impacts to bat maternity/roost/hibernation sites would occur primarily from direct disturbance due to earth moving activities and tree removal, and indirectly noise and vibration created from project construction equipment and construction related activities. Noise and vibration could lead to these bat species abandoning established roosting/maternity/hibernation sites. Impacts to these species would be considered significant. In the event that bat roost/maternity/hibernation sites become established in the proposed project site or buffer area prior to project implementation, the following mitigation measures will be implemented to protect this species from potential impacts:

1. Pre-activity surveys will be conducted for bat species and their roosting/maternity/hibernation sites in the project site and buffer area. If a bat roosting/maternity/hibernation site is identified during these survey or suspected to be present, a buffer area will be established to avoid impacts on the burrow/maternity site, and subsequently the bat species. The following exclusion zone will apply:

    - 300 feet for known or potential maternity roosting site. If deemed warranted project proponent will consult with Mendocino County and the appropriate state (CDFW) and Federal (USFWS) regulatory agencies to work out a plan to avoid impacts to the species before work resumes.

Potential Impacts to Wetland Habitat and Other Waters from Project Activities

Implementation of the proposed project would not result in any direct impacts on freshwater emergent wetlands within the project site or buffer areas as the project has been currently designed. However, a small potential exists that inadvertent impacts to wetlands could occur due to the proximity of wetlands to the project components (existing access road). Impacts could occur due to driving construction equipment in areas outside of the proposed construction envelope. Impacts could also occur if sediment from the construction envelope is washed out of the work area and into a wetland habitat area or other waters. These impacts would be considered significant.

Telespan Communications will implement the following measures to ensure no disturbance or impacts occur to wetland habitat and other waters in the project buffer area:

- To avoid debris contamination into drainages, wetlands, and other sensitive habitats, silt fence or other sediment control devices will be placed around construction sites to contain spoils from construction excavation activities.

- Environmental awareness training shall be presented to all personnel working in the field on the proposed project site. Training shall consist of a brief presentation in which biologists knowledgeable of wetland habitat, streams, and other waters, and legislative protection shall explain concerns.

- Project site boundaries shall be clearly delineated by stakes and /or flagging to minimize inadvertent degradation or loss of adjacent habitat during project operations. Staff and/or its contractors shall post signs and/or place fence around the project site to restrict access of vehicles and equipment unrelated to project operations.

6.0 Conclusions and Determinations

6.1 Conclusions

This project will incorporate reasonable and prudent measures for avoidance and minimization, described in Section 1.0, and species-specific avoidance and minimization measures. As a result, the project is not anticipated to result in take of any of the listed species described in this biological assessment.

Provided the precautions outlined above are followed, it is our opinion the proposed project would:

- Have less than significant impacts upon federal and California endangered, threatened, proposed or candidate species;
- Not result in destruction or adverse modification of a critical habitat area of a federal or California endangered or threatened species; and
- Not result in "take" of migratory birds protected under the Migratory Bird Treaty Act and other state, local or federal laws.

7.0 Literature Cited

ABRAMS, L. 1923. ILLUSTRATED FLORA OF THE PACIFIC STATES. VOLUME I. STANFORD UNIVERSITY PRESS, STANFORD, CALIFORNIA. 538 PP.

ABRAMS, L. 1944. ILLUSTRATED FLORA OF THE PACIFIC STATES. VOLUME II. STANFORD UNIVERSITY PRESS, STANFORD, CALIFORNIA. 635 PP.

ABRAMS, L. 1951. ILLUSTRATED FLORA OF THE PACIFIC STATES. VOLUME III. STANFORD UNIVERSITY PRESS, STANFORD, CALIFORNIA. 866 PP.

ABRAMS, L. AND R. S. FERRIS. 1960. ILLUSTRATED FLORA OF THE PACIFIC STATES. VOLUME IV. STANFORD UNIVERSITY PRESS, STANFORD, CALIFORNIA. 732 PP.

BAICICH, P. AND C. HARRISON. 1997. A GUIDE TO NESTS, EGGS AND NESTLINGS OF NORTH AMERICAN BIRDS. SECOND EDITION. NATURAL WORLD ACADEMIC PRESS. SAN DIEGO. 347 PP.

BEHNKE, R. 2002. TROUT AND SALMON OF NORTH AMERICA. THE FREE PRESS, NEW YORK. 360 PP.

BULGER, J. B., N. J. SCOTT, JR., AND R. B. SEYMOUR. 2003. TERRESTRIAL ACTIVITY AND CONSERVATION OF ADULT CALIFORNIA RED-LEGGED FROGS *RANA AURORA DRAYTONII* IN COASTAL FORESTS AND GRASSLANDS. BIOLOGICAL CONSERVATION **110** :85-95

BURT, W. B. AND R. P. GROSSENHEIDER. 1976. A FIELD GUIDE TO THE MAMMALS. HOUGHTON MIFFLIN COMPANY. BOSTON, MASSACHUSETTS. 289 PP.

CALIFORNIA DEPARTMENT OF FISH AND WILDLIFE (CDFW). 2019. SPECIAL ANIMALS. NATURAL DIVERSITY DATA BASE, WILDLIFE AND HABITAT DATA ANALYSIS BRANCH. JANUARY.

CALIFORNIA DEPARTMENT OF FISH AND WILDLIFE (CDFW). 2019. STATE AND FEDERALLY LISTED ENDANGERED AND THREATENED ANIMALS OF CALIFORNIA. NATURAL DIVERSITY DATA BASE, WILDLIFE AND HABITAT DATA ANALYSIS BRANCH. JANUARY.

CALIFORNIA DEPARTMENT OF FISH AND GAME (CDFG). 1988B. CALIFORNIA'S WILDLIFE - AMPHIBIANS AND REPTILE. VOLUME I. CALIFORNIA DEPARTMENT OF FISH AND GAME. EDITORS, ZEINER, D.C., W.F. LAUDENSLAYER, JR., AND K.E. MAYER.

CALIFORNIA NATIVE PLANT SOCIETY. 2019. ELECTRONIC INVENTORY OF RARE AND ENDANGERED VASCULAR PLANTS OF CALIFORNIA. CALIFORNIA NATIVE PLANT SOCIETY, SACRAMENTO, CALIFORNIA.

CALIFORNIA NATURAL DIVERSITY DATA BASE (CNDDB). 2019. REPORTED OCCURRENCES FOR

SPECIAL-STATUS WILDLIFE SPECIES. WILDLIFE CONSERVATION DIVISION. SACRAMENTO, CALIFORNIA. JANUARY.

ENVIRONMENTAL LABORATORY. 1987. CORPS OF ENGINEERS WETLANDS DELINEATION MANUAL. DEPARTMENT OF THE ARMY, WATERWAYS EXPERIMENT STATION, VICKSBURG, MISSISSIPPI 39180-0631.

FELLERS, G. AND P. KLEEMAN. 2007. CALIFORNIA RED-LEGGED FROG (RANA DRAYTONII) MOVEMENT AND HABITAT USE: IMPLICATIONS FOR CONSERVATION. J. OF HERPETOLOGY VOL 41 (2): 271-281.

GRINNELL, J. AND A. MILLER. 1944. THE DISTRIBUTION OF THE BIRDS OF CALIFORNIA. ARTEMESIA PRESS, LEE VINING, CALIFORNIA.

HICKMAN, J.C. (ED.) 1993. THE JEPSON MANUAL: HIGHER PLANTS OF CALIFORNIA. UNIVERSITY OF CALIFORNIA PRESS.

HOLLAND, R. F. 1986. PRELIMNARY DESCRIPTIONS OF THE TERRESTRIAL NATURAL COMMUNITIES OF CALIFORNIA. UNPUBLISHED REPORT. CALIFORNIA DEPARTMENT OF FISH AND GAME, NATURAL HERITAGE DIVISION, SACRAMENTO, CA.

JENNINGS, M.R. AND M.P. HAYES. 1994. AMPHIBIAN AND REPTILE SPECIES OF SPECIAL CONCERN IN CALIFORNIA. PREPARED FOR THE CALIF. DEPT. OF FISH AND GAME INLAND FISHERIES DIV. RANCHO CORDOVA, CALIF. NOVEMBER 1. 255 PP.

MAYER, K.E. AND W. F. LAUDENSLAYER, JR. EDS. 1988. A GUIDE TO WILDLIFE HABITATS OF CALIFORNIA. CALIFORNIA DEPARTMENT OF FORESTRY AND FIRE PROTECTION. SACRAMENTO. 166 PP.

MCCULLOUGH, D. 1996. METAPOPULATIONS AND WILDLIFE CONSERVATION. ISLAND PRESS. 429PP.

MOYLE, P.B. 2002. INLAND FISHES OF CALIFORNIA. UNIVERSITY OF CALIFORNIA PRESS, BERKELEY, CALIFORNIA.

NATIONAL OCEANIC AND ATMOSPHERIC ADMINISTRATION (NOAA). 2005. DESIGNATION OF CRITICAL HABITAT FOR SEVEN EVOLUTIONARILY SIGNIFICANT UNITS OF PACIFIC SALMON AND STEELHEAD IN CALIFORNIA. FEDERAL REGISTER VOL. 70(170): 52488-52626.

REMSEN, H.V. 1988. BIRD SPECIES OF SPECIAL CONCERN IN CALIFORNIA: AN ANNOTATED LIST OF DECLINING OR VULNERABLE BIRD SPECIES. CALIFORNIA DEPARTMENT OF FISH AND GAME, THE RESOURCES AGENCY.

SAWYER, JOHN O., TODD KEELER-WOLF, JULIE M EVENS. 2009. A MANUAL OF CALIFORNIA

VEGETATION. SECOND EDITION. CALIFORNIA NATIVE PLANT SOCIETY PRESS, SACRAMENTO, CA. 1300 PAGES.

SPENCER, W.D., P. BEIER, K. PENROD, K. WINTERS, C. PAULMAN, H. RUSTIGIAN-ROMSOS, J. STRITTHOLT, M. PARISI, AND A. PETTLER. 2010. CALIFORNIA ESSENTIAL HABITAT CONNECTIVITY PROJECT: A STRATEGY FOR CONSERVING A CONNECTED CALIFORNIA. PREPARED FOR CALIFORNIA DEPARTMENT OF TRANSPORTATION, CALIFORNIA DEPARTMENT OF FISH AND GAME, AND FEDERAL HIGHWAYS ADMINISTRATION.

STEBBINS, R. C. 1985. A FIELD GUIDE TO WESTERN REPTILES AND AMPHIBIANS. HOUGHTON MIFFLIN COMPANY.

TATARIAN, P. 2008. MOVEMENT PATTERNS OF CALIFORNIA RED-LEGGED FROG (RANA DRAYTONII) IN AN INLAND CALIFORNIA ENVIRONMENT. HERPETOLOGICAL CONSERVATION AND BIOLOGY 3(2):155-169

USFWS (U.S. FISH AND WILDLIFE SERVICE). 2000. GUIDELINES FOR CONDUCTING AND REPORTING BOTANICAL INVENTORIES FOR FEDERALLY LISTED, PROPOSED, AND CANDIDATE PLANTS. U.S. FISH AND WILDLIFE SERVICE. JANUARY 2000.

USFWS (U.S. FISH AND WILDLIFE SERVICE). 2019. THREATENED AND ENDANGERED SPECIES SYSTEM (TESS) AND CANDIDATE SPECIES AS OF JANUARY/2019.

WELSH, H. 1994. BIOREGIONS: AN ECOLOGICAL AND EVOLUTIONARY PERSPECTIVE AND A PROPOSAL FOR CALIFORNIA. CALIFORNIA FISH AND GAME (80) 3:97-124.

WHITTAKER, R. 1998. ISLAND BIOGEOGRAPHY: ECOLOGY, EVOLUTION AND CONSERVATION. OXFORD UNIVERSITY PRESS. 285PP.

WILLIAMS, D.F. 1986. MAMMALIAN SPECIES OF SPECIAL CONCERN IN CALIFORNIA. CALIFORNIA DEPARTMENT OF FISH AND GAME. WILDLIFE MANAGEMENT DIVISION ADMINISTRATIVE REPORT 86-1. 112 PP.

ZEINER, D. C., W. F. LAUDENSLAYER, JR., K. E. MAYER AND M. WHITE. 1990. CALIFORNIA'S WILDLIFE. VOLUME I – AMPHIBIANS AND REPTILES. VOLUME II - BIRDS, AND VOLUME III - MAMMALS. CALIFORNIA DEPARTMENT OF FISH AND GAME. SACRAMENTO, CALIFORNIA.

BIOLOGICAL ASSESSMENT REPORT

Including:

- Biological Assessment Report Prepared by Geist Engineering and Environmental Group, Inc. Based on Three (3) Separate Site Visits Conducted Over a Month Apart

3888 State Street, Suite 204; Santa Barbara, CA 93105-3164
Phone (805) 899-2700 Fax (805) 899-2775

GEIST ENGINEERING & ENVIRONMENTAL GROUP INC

July 16, 2019

TeleSpan Communications

RE: Biological Resource Assessment
Proposed AT&T New Site Build 199-foot Concealed Monopole & Compound
TeleSpan Site Name: Gualala Wireless Collocation
Highway 1, Gualala, Mendocino County, CA 95445
GE²G Project # 311251

Geist Engineering and Environmental Group, Inc. (GE²G), appreciates the opportunity to provide the Biological Resource Assessment completed for the above listed proposed TeleSpan Communications undertaking.

Executive Summary:
Based on the initial assessment on May 1, 2019 and the additional botanical assessments surveys on May 30 2019 and June 24, 2019, no Federal critical habitat was identified within the proposed project site and buffer area. A delineation of wetlands and watercourses within the project study area was conducted by Synthesis Planning wetland ecologists during the June 24, 2019 site visit. Ponds, intermittent or perennial streams were not identified within the proposed direct project site however freshwater emergent wetland in areas of the project buffer area adjacent to the existing access road to the proposed tower site. This wetland area is located outside of the areas proposed for ground disturbance during proposed construction activities, and therefore, will not be impacted during project implementation. Three (3) vegetation communities were observed within the study area and include the following: 1) redwood-fir forest, 2) freshwater emergent wetland, and 3) ruderal vegetation.

No targeted special status plant species were identified in the study area during the three surveys. Common plant species observed during field surveys. The botanical surveys were conducted during the appropriate flowering season for all identified sensitive plant species. Because common wildlife species found in the project area are locally and regionally common, potential impacts to these resources are considered less than significant.

Therefore, no avoidance or minimization measures are proposed at this time. Per the completed Biological Resources Assessment Report it is our finding that potential impacts to wildlife or plants can be avoided with the below Best Construction Practices as well Standard Construction Conditions.

Recommendations:
None of the species mentioned in the Biological Resource Assessment, or evidence of the species, were observed during biological surveys. No avoidance or minimization measures are proposed at this time.

<u>Best Management Practices & Standard Construction Conditions are briefly summarized on the following page:</u>

GEIST ENGINEERING AND ENVIRONMENTAL GROUP, INC.
4200 Park Boulevard #149, Oakland, California 94602
510.238.8851 (p) / 510.238.8644 (f)
Field Offices: Arizona, California, Colorado, Oregon, and Washington

1. Surveys for identified special-status species by qualified biologists shall be conducted at the appropriate times before construction starts to determine occupancy at the site. If construction will start during the breeding or nesting season for Migratory Bird Treaty Act (MBTA) birds than a preconstruction avian survey for nesting birds should be implemented. *(Breeding season starts February 1, nesting season starts March 1st and both continue through until mid-September with special circumstances for individual species).*

2. Construction Best Management Practices as well as Standard Construction Conditions will need to be completed to prevent take of individuals discussed are listed in the attached report (Staging and fueling, silt fencing, pre-construction surveys, biological monitor, Environmental Awareness Training for construction workers, and site boundaries shall be clearly delineated by stakes).

3. Specific to the Best Management Practices above silt fencing to be located by the biologist will be placed in all areas of the ground disturbance areas to keep all ground disturbance activities and working areas for equipment away from existing features to be avoided including existing access routes to minimize inadvertent degradation or loss of adjacent habitat during project operations.

If you have any inquiries or would like any additional information, please contact me at (510) 238-8851, or sgeist@geistenvironmental.com.

Sincerely,

Stephen Geist, President,
Geist Engineering and Environmental Group, Inc.

Attached:

1) Telespan Communications Bryson Tower, Gualala Wireless Collocation, Biological Resource Assessment as completed by Senior Consulting Wildlife Biologist Cord Hute, dated July 2019

GEIST ENGINEERING AND ENVIRONMENTAL GROUP, INC.
4200 Park Boulevard #149, Oakland, California 94602
510.238.8851 (p) / 510.238.8644 (f)
Field Offices: Arizona, California, Colorado, Oregon, and Washington